Cylinder Tilt Saddle Instruction Manual

MODELS: SDT55, SDT200, SDT250, SDT300

SFA Companies 10939 N. Pomona Ave. Kansas City, MO 64153
Tel: 888-332-6419 - Fax: 816-448-2142
E-mail: sales@bvahydraulics.com Website: www.bvahydraulics.com

This is the safety alert symbol. It is used to alert you to potential personal injury hazards. Obey all safety messages that follow this symbol to avoid possible injury or death.

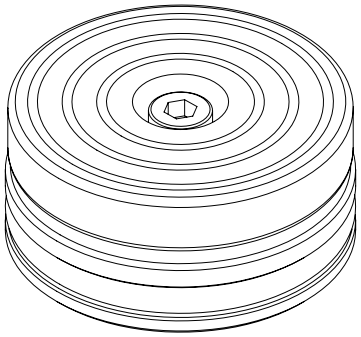

SDT55

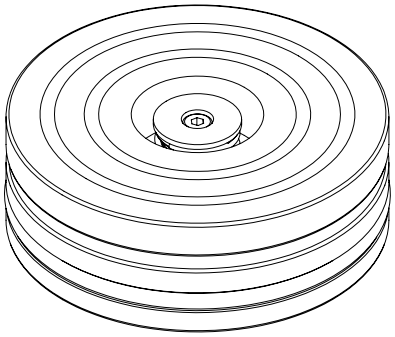

SDT200 & SDT250

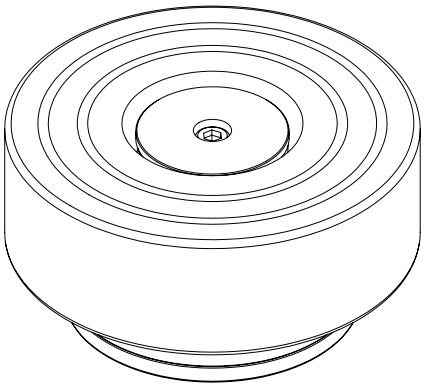

SDT300

Printed in Taiwan

Save these instructions. For your safety, read and understand the information contained within. The owner and operator shall have an understanding of this device and safe operating procedures before attempting to use this device. Instructions and safety information shall be conveyed in operator's native language before use of this device is authorized. Make certain that the operator thoroughly understands the inherent dangers associated with the use and misuse of the product. If any doubt exists as to the safe and proper use of this product as outlined in this factory authorized manual, remove from service immediately.

Inspect before each use. It is recommended that, prior to each use, an inspection be done by qualified personnel and that any missing or damaged parts be replaced with factory authorized replacement parts only. Any valve that appears to be damaged in any way, is worn, leaking or operates abnormally shall be removed from service immediately until such time as repairs can be made. Any valve that has been or suspected to have been subject to a shock load (a load dropped suddenly, causing the system pressure to exceed 10,000 PSI), shall be removed from service immediately until checked by qualified personnel. Owners and operators of this equipment shall be aware that the use and subsequent repair of this equipment may require special training and knowledge.

This is the safety alert symbol. It is used to alert you to potential personal injury hazards. Obey all safety messages that follow this symbol to avoid possible injury or death.

⚠WARNING

- Study, understand, and follow all instructions provided with and on this device before use.
- All WARNING statements must be carefully observed to help prevent personal injury.
- No alteration shall be made to this device.
- Always wear protective gear when operating hydraulic equipment.
- Keep hydraulic equipment away from flames and heat. Hydraulic fluid can ignite and burn. Do not operate if leaks are detected.
- **Crush Hazard.** Keep hands and feet away from loading area. Avoid pinch points or crush points that can be created by the load or parts of cylinder.
- To avoid crushing and related injuries: NEVER work on, under or around a lifted load before it is properly supported by appropriate mechanical means. Never rely on hydraulic pressure alone to support load.

HYDRAULIC CYLINDERS

- The user must be a qualified operator familiar with the correct operation, maintenance, and use of cylinders. Lack of knowledge in any of these areas can lead to personal injury.
- Do not exceed rated capacity of the cylinder or any equipment in the system.
- Burst hazard exists if hose or connection pressure exceeds rated pressure.
- Inspect cylinder, hoses and connections before each use to prevent unsafe conditions from developing. Do not use if they are damaged, altered or in poor condition. Do not use a cylinder with bent or damaged coupler or damaged threads.
- Use gauge or other load measuring instrument to verify load.
- Do not subject the cylinder to shock loads.
- Never attempt to disconnect hydraulic connections under pressure.
- Use only approved accessories and approved hydraulic fluid.
- Never attach ANY component not authorized by manufacturer.
- Never use other than factory provided and/or authorized fasteners.
- Under certain conditions, the use of an extension with a hydraulic cylinder may not be advisable and could present a dangerous condition.
- Cylinder must be on a stable base which is able to support the load while pushing or lifting. Ensure cylinder is fully engaged into/onto adapters, extension accessories.
- Use shims, friction material or constraints to prevent slippage of the base or load.
- Distribute the load evenly across the entire saddle surface. Do not off-center loads on a cylinder. The load can tip or the cylinder can “kick out”.

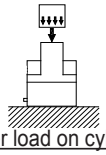

Center load on cylinder

- This device is not suitable for use as support device! As the load is lifted, use blocking and cribbing to guard against a falling load.
- All personnel must be clear before lowering.
- Never try to disassemble a hydraulic cylinder, refer repairs to qualified, authorized personnel.

HYDRAULIC HOSES & FLUID TRANSMISSION LINES

- Avoid short runs of straight line tubing. Straight line runs do not provide for expansion and contraction due to pressure and/or temperature changes.
- Reduce stress in tube lines. Long tubing runs should be supported by brackets or clips. Before operating the pump, tighten all hose connections with proper tools. Do not overtighten. Connections should only be tightened securely and leak-free. Overtightening can cause premature thread failure or high pressure fittings to burst.
- Should a hydraulic hose ever rupture, burst or need to be disconnected, immediately shut off the pump and release all pressure. Never attempt to grasp a leaking pressurized hose with your hands. The force of escaping hydraulic fluid can inflict injury.
- Do not subject the hose to potential hazard such as fire, sharp objects, extreme heat or cold, or heavy impact.
- Do not allow the hose to kink, twist, curl, crush, cut or bend so tightly that the fluid flow within the hose is blocked or reduced. Periodically inspect the hose for wear.
- Do not pull, position or move setup by the hose.
- Hose material and coupler seals must be compatible with hydraulic fluid used. Hoses also must not come in contact with corrosive materials such as battery acid, creosote-impregnated objects and wet paint. Never paint a coupler or hose.
- FAILURE TO HEED THESE WARNINGS MAY RESULT IN PERSONAL INJURY AS WELL AS PROPERTY DAMAGE.

BEFORE USE

1. Before using this product, read the owner's manual completely and familiarize yourself thoroughly with the product, its components and recognize the hazards associated with its use.
2. Verify that the product and the application are compatible. If in doubt, call BVA Hydraulics Technical Service (888) 332-6419.
3. Inspect before each use. Do not use if broken, leaking or damaged components are noted.
4. Replace worn or damaged parts with BVA Hydraulics authorized replacement parts only.
5. Use adequate eye protection when operating or near this device.
6. Ensure method of confirming load is accurate and working properly. Have gauge or load cell accuracy verified by qualified personnel on a yearly basis.

SET UP

1. Connect and secure hoses, cylinders, fittings, gauges and pump etc. noting that the proper ports are connected. Always secure threaded port connections with non-hardening pipe thread compound. Take care not to introduce compound into port orifices.
2. Verify that the cylinder and base are compatible.

⚠ *Use an approved, high-grade pipe sealant to seal all hydraulic connections. When using teflon tape, never apply the tape over ends of fittings where it can be torn loose and get into the hydraulic system.*

⚠ *If you are not trained and familiar with installing a valve, please have an authorized BVA service center to perform this procedure.*

MAINTENANCE

Periodically inspect base, ensure all parts are not damaged. Do not apply oil or grease to any portion of the base. If rust appears, sand affected area and cover with suitable utility paint.

Storage

Depressurize pump, disconnect all hydraulic lines to prevent accidental operation. Wipe the unit clean. Store in a clean, dry environment.

BVA Cylinder Tilt Saddle Specifications

Model No.	Rated Capacity (Ton)	For Cylinder (S)	Max. Tilt Angle (Deg.)	Dimension				
				A	B	C	D	E
SDT55	55 - 100	H55, HD55, H75, H100, HLN55 & HLN100	5	1.29"	0.51"	0.67"	2.76"	2.80"
SDT200	200	HLN150 & HLN200		1.77"	0.53"	1.02"	5.12"	5.12"
SDT250	250	HLN250		1.81"	0.53"	1.02"	5.91"	5.91"
SDT300	300	HLN300		3.94"	2.58"	1.02"	7.68"	5.47"

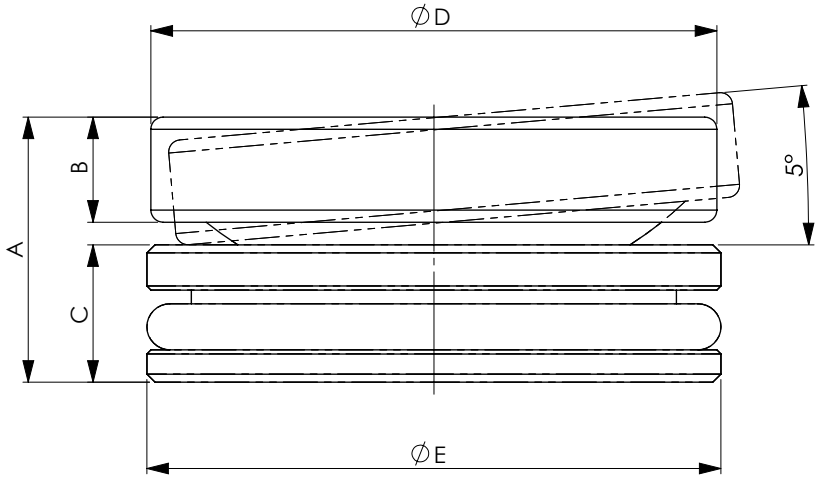

Cylinder Tilt Saddle

MODEL: SDT55

SFA Companies 10939 N. Pomona Ave. Kansas City, MO 64153
Tel: 888-332-6419 - Fax: 816-448-2142
E-mail: sales@bvahydraulics.com Website: www.bvahydraulics.com

Note: Not all components of the Cylinder Tilt Saddle are replacement items, but are illustrated as a convenient reference of location and position in the assembly sequence.

No.	Part No.	Description	Qty.
1	649-1-0080-100	Hex Bolt	1
2	554-2-0109-108	Compression Spring	1
3	N/A	Tilt Saddle (Upper)	1
4	N/A	Saddle Base (Lower)	1
5	511-7-0600-107	O-ring	1

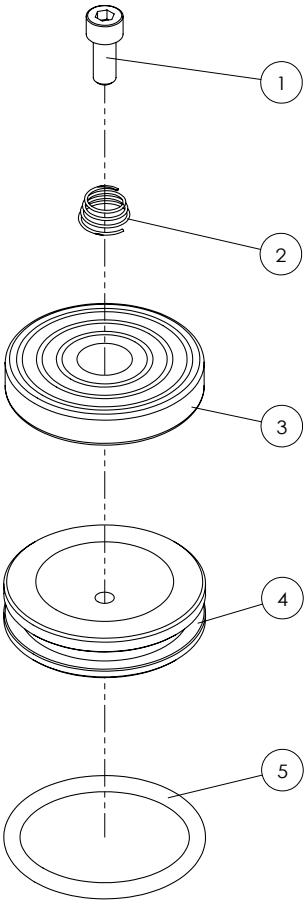

Cylinder Tilt Saddle

MODELS: SDT200, SDT250

SFA Companies 10939 N. Pomona Ave. Kansas City, MO 64153
Tel: 888-332-6419 - Fax: 816-448-2142
E-mail: sales@bvahydraulics.com Website: www.bvahydraulics.com

Note: Not all components of the Cylinder Tilt Saddle are replacement items, but are illustrated as a convenient reference of location and position in the assembly sequence.

No.	SDT200 Part No.	SDT250 Part No.	Description	Qty.
1	649-1-0060-306	649-1-0060-609	Hex Bolt	1
2	D21-6-3001-104		Spring Cap	1
3	512-2-0290-105		Compression Spring	1
4	N/A		Tilt Saddle (Upper)	1
5	N/A		Saddle Base (Lower)	1
6	511-7-1200-106	511-7-1396-109	O-Ring	1

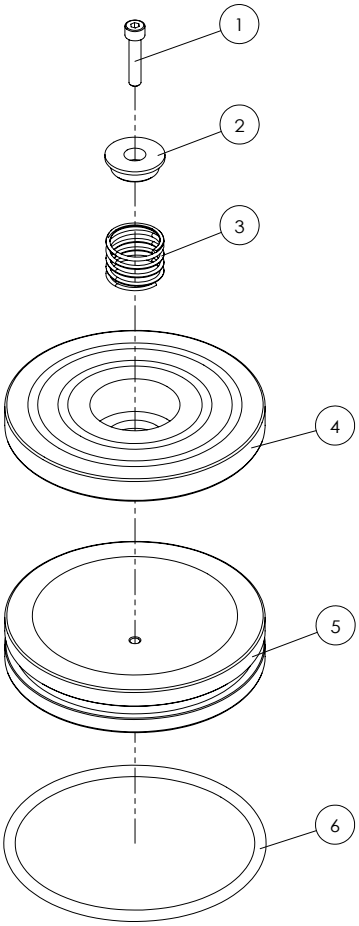

Cylinder Tilt Saddle

MODEL: SDT300

SFA Companies 10939 N. Pomona Ave. Kansas City, MO 64153
Tel: 888-332-6419 - Fax: 816-448-2142
E-mail: sales@bvahydraulics.com Website: www.bvahydraulics.com

Note: Not all components of the Cylinder Tilt Saddle are replacement items, but are illustrated as a convenient reference of location and position in the assembly sequence.

No.	Part No.	Description	Qty.
1	649-1-0100-403	Hex Bolt	1
2	D22-6-3001-101	Spring Cap	1
3	512-2-0710-101	Compression Spring	1
4	N/A	Tilt Saddle (Upper)	1
5	N/A	Saddle Base (Lower)	1
6	511-7-1296-105	O-Ring	1

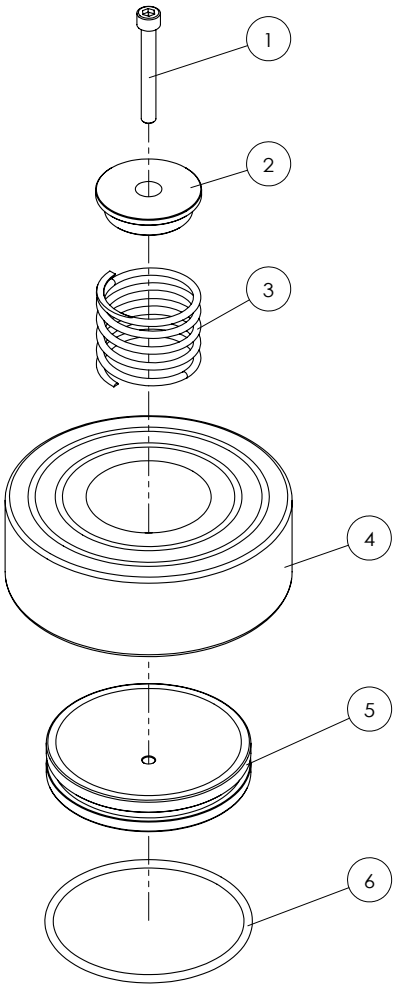

LIFETIME LIMITED WARRANTY

BVA Hydraulics®, represented in the United States by Shinn Fu Company of America, Inc. [“SFA”] warrants this product to be free from defects in material and workmanship for the life of the product as long as the original purchaser owns the product. The warranty is non-transferable and is subject to the terms, exclusions, and limitations described below:

- Damaged components, including but not limited to bent rams, dented or crushed cylinder walls, broken welds or couplers as well as worn out seals, o-rings and springs are the result of misuse and not covered by warranty and BVA Hydraulics will not provide any warranty credit for such damaged components.
- This warranty does not cover ordinary wear and tear, overloading, alterations (including repairs or attempted repairs not performed by BVA Hydraulics or one of its authorized personnel), improper fluid use, or use of the product in any manner for which the product was not intended or the use of which is not in accordance with the instructions or warnings provided with the product.
- In the unlikely event that a BVA Hydraulics product fails due to material defect in workmanship, you may contact SFA for disposition. In such cases, the customer’s sole and exclusive remedy for any breach or alleged breach of warranty is limited to the repair or replacement of the defective product.
- Under no circumstances is BVA Hydraulics liable for any consequential or incidental damage or loss whatsoever.
- THIS WARRANTY IS LIMITED TO NEW PRODUCTS SOLD THROUGH AUTHORIZED DISTRIBUTORS AND OTHER CHANNELS DESIGNATED BY BVA HYDRAULICS. NO AGENT, EMPLOYEE OR OTHER REPRESENTATIVE OF BVA HYDRAULICS IS AUTHORIZED TO MODIFY THIS WARRANTY.
- THE FOREGOING IS EXCLUSIVE AND IS IN LIEU OF ALL OTHER EXPRESS AND IMPLIED WARRANTIES, INCLUDING BUT NOT LIMITED TO THE IMPLIED WARRANTIES OF MERCHANTABILITY AND FOR A FITNESS FOR A PARTICULAR PURPOSE.
- Components not manufactured by BVA Hydraulics including certain motor systems, gasoline engines, and others are not covered by this warranty and instead are covered by the manufacturer’s separate manufacturer’s warranty provided in the package.
- BVA Hydraulics’ liability in all cases is limited to, and will not exceed the purchase price paid for the product.

SFA Companies
10939 N. Pomona Ave. Kansas City, MO 64153
Tel: 888-332-6419
E-mail: sales@bvahydraulics.com

Note Page

Contact:
SFA Companies
10939 N. Pomona Ave. Kansas City, MO 64153, U.S.A.
Tel:(888)332-6419 Fax:(816) 448-2142
E-Mail:sales@bvahydraulics.com
BVA Website: http://www.bvahydraulics.com