Shop Presses Instruction Manual

MODELS: IAP5506, IEP5506, IMP5506, IAP5513, IEP5513, IEPD5513, IEP10010, IAP10010, IEPD10010 & IEPDS10010

SFA Companies 10939 N. Pomona Ave. Kansas City, MO 64153
Tel: 888-332-6419 * Fax: 816-891-6599
E-mail: sales@bvahydraulics.com Website: www.bvahydraulics.com

Max. Operating Pressure 10,000 PSI

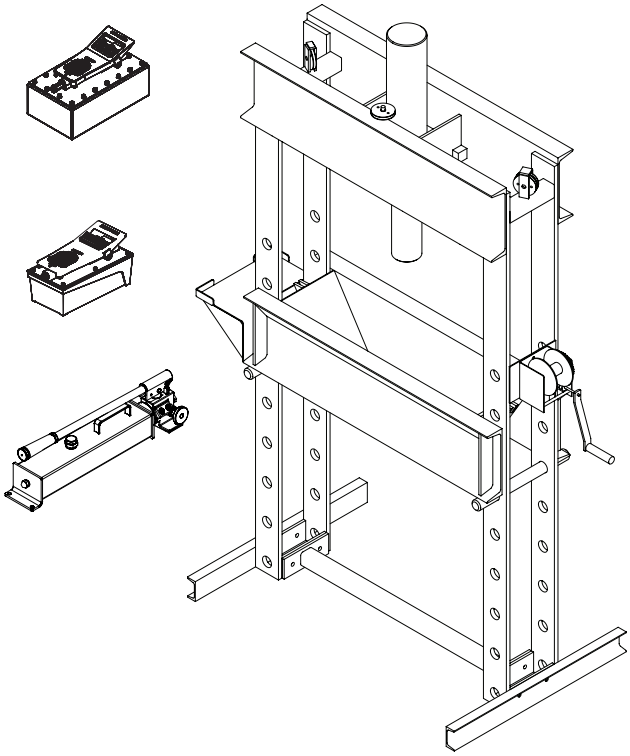

Models IAP5506, IEP5506, IMP5506, IAP5513, IEP5513 & IEPD5513

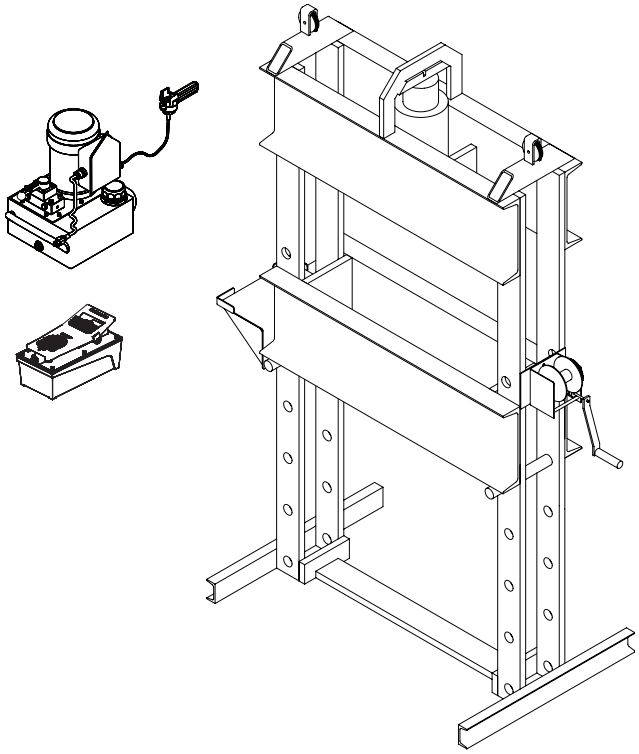

Models IEP10010, IAP10010, IEPD10010 & IEPDS10010

This is the safety alert symbol. It is used to alert you to potential personal injury hazards. Obey all safety messages that follow this symbol to avoid possible injury or death.

Printed in USA

SAFETY AND GENERAL INFORMATION

Save these instructions. For your safety, read and understand the information contained within. The owner and operator shall have an understanding of this product and safe operating procedures before attempting to use this product. Instructions and safety information shall be conveyed in operator's native language before use of this product is authorized. Make certain that the operator thoroughly understands the inherent dangers associated with the use and misuse of the product. If any doubt exists as to the safe and proper use of this product as outlined in this factory authorized manual, remove from service immediately.

Inspect before each use. Do not use if broken, bent, cracked or otherwise damaged parts are noted. If any component of this product has been or suspected to have been subjected to a shock load (a load dropped suddenly, unexpectedly upon it), discontinue use until checked out by a BVA Hydraulics Authorized Service Center. Owners and operators of this equipment shall be aware that the use and subsequent repair of this equipment may require special training and knowledge. It is recommended that an annual inspection be done by qualified personnel and that any missing or damaged parts, decals, warning / safety labels or signs be replaced with factory authorized replacement parts only. Any component of this Equipment that appears to be damaged in any way, is worn or operates abnormally shall be removed from service immediately until such time as it can be repaired/replaced. Labels and Instruction Manuals are available from manufacturer.

PRODUCT DESCRIPTION

BVA Hydraulics Shop presses are designed for automotive, truck, implement, fleet, and industrial repair shops where pressing, bending, straightening, forming, holding is required. Each press includes a cylinder, an electric pump with pendant switch, a winch assembly which provides safe and fast way to raise and lower the bed frame, and a pressure gauge which provides for monitoring the applied press force.

Typical applications include installation and removal of alternator and power steering pump bearings, axle bearings, transmission bearings, seal, driveshaft bearings and u-joints and others. It is not intended for use as an assembly table or as fixture stand used to secure a large, final assembly component. Please refer to Cylinder and Pump manuals for more information.

WARNING: *To reduce the risk of personal injury and/or property damage, ensure that the rated working pressure of each pressurized attachment be equal to or greater than the rated working pressure developed by the hydraulic pump.*

NOTICE: *The power retract feature of the IEPD5513, IEPD10010 & IEPDS10010 Shop Presses is not intended to be used under load. Never pull or raise a workpiece with the power retract feature.*

WARNING

- *Study, understand, and follow all instructions provided with and on this device before use.*
- *Do not exceed rated capacity.*
- *Prior to use, make sure press is securely anchored.*
- *The press shall be installed and operated in accordance with federal (OSHA), state and local safety standards.*
- *Operators and observers shall wear eye protection that meets ANSI Z87.1 and OSHA standards.*
- *Keep hands, arms, feet and legs out of the work area. Accidental slippage can result in personal injury.*
- *Use appropriate guarding to contain any pieces that may break or fly apart when applying force.*
- *Use only press accessories having a capacity rating equal to or greater than the capacity of the press.*
- *Verify lift cables are slack before pressing on the bolster.*
- *Avoid off-center loads.*
- *No alterations shall be made to the product.*
- *Failure to heed and understand these instructions and markings may result in personal injury, property damage or both.*

BEFORE USE

1. Inspect before each use. Do not use if bent, broken or cracked components are noted. Check for and tighten any loose assemblies.
2. Verify that the product and the application are compatible, if in doubt call BVA Technical Service.
3. Before using this product, read the operator's manual completely and familiarize yourself thoroughly with the product, its components and recognize the potential hazards associated with its use.

SPECIFICATIONS

Press Model	Rated Capacity	Cylinder Model	Pump Model/Type	Press Bed Depth	Press Bed Width	Press Size (H" x W" x L")	Min. Work Height (in.)	Max. Work Height (in.)
IMP5506	55 Ton	H5506	P2001/manual	14-7/8"	35-1/2"	79-1/8 x 56 x 30	14	55-1/2
IAP5506			PA2000/air-hydraulic					
IEP5506			PEW0501T/electric					
IAP5513		H5513	PA3801/air-hydraulic					
IEP5513			PEW0501T/electric					
IEPD5513		HD5513	PEWM0501T/electric					
IAP10010	100 Ton	H10010	PA7550	16-1/4"	35-3/8"	89-1/2 x 63 x 30	11-1/4	52
IEP10010			PEW1002T/electric					
IEPD10010		HD10010	PEWM1002T/electric					
IEPDS10010			PESML1002T/electric					

Cylinder

Cylinder Model	Rated Capacity (ton)	Stroke (in.)	Effective Area (in^3)	Oil Volume (in^3)	Min Height (in.)	Max Height (in.)	Outer Dia. (in.)	Ram Dia. (in.)	Saddle Dia. (in.)	Collar Thread (in.)	Collar Thread Length (in.)
H5506	55	6.22	10.99	68.34	11.14	17.36	5	3.15	2.76	5"-12	2.17
H5513		13.27		145.77	18.15	31.42					
HD5513		13.19		144.94	20.04	33.23		3.74			1.73
H10010	100	10.24	20.57	210.6	17.68	27.93	6.97	4.13		6-7/8"-12	
HD10010		10.13		208.3		27.80		3.74	2.95		2.00

Manual Pump (Hand pump)

Hand Pump Model	Usable Oil Volume (in^3)	Pressure Rating (psi)		Oil Displacement (in^3)		Oil Outlet Port Thread	Weight (lbs)
		1st Stage	2nd Stage	1st Stage	2nd Stage		
P2001	122	200	10,000	0.81	0.14	3/8"-18 NPTF	24

Air Pump

Air Pump Model	Usable Oil Volume (in^3)	Pressure Rating (psi)	Oil Output Flow Rate (in^3/min)		Input Air Pressure Range (psi)	Weight (lbs)
			No Load	Load		
PA1500	91.5	10,000	65	11	90-175	18
PA3801	232					27
PA7550	460.6					36

Electric Pump

Electric Pump Model	Reservoir Capacity (gal)	Pressure Rating (psi)		Oil Output Flow Rate (in^3/min)		Valve Type	Motor Size (hp)	Current Draw (A)	Motor Voltage (V)	Weight (lbs)
		1st Stage	2nd Stage	1st Stage	2nd Stage					
PEW0501T	1	350	10,000	293	18	3-way, 3-pos	0.5	9	115/125	60
PEWM0501T						4-way, 3-pos				

Electric Pump (con't)

PEW1002T	2	700	10,000	397	37	3-way, 3-pos	1	12	115/125	71
PEWM1002T						4-way, 3-pos				
PESML1002T				311						73

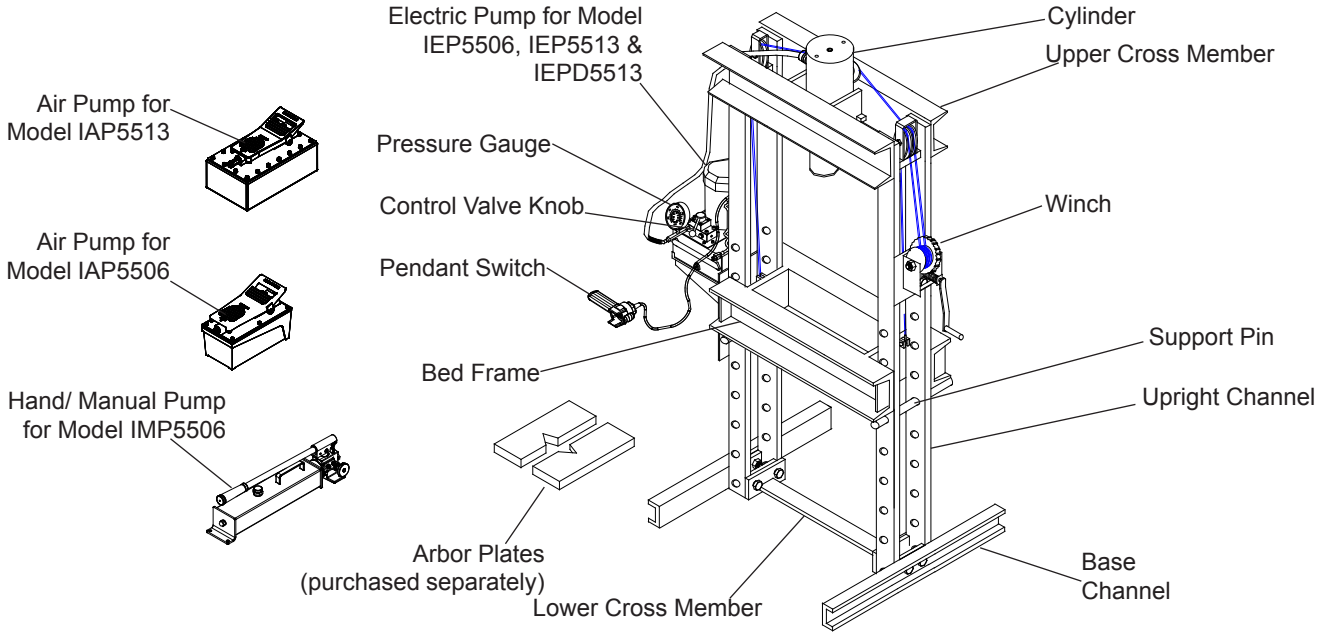

Figure 1 - Components for 55 Ton Press.

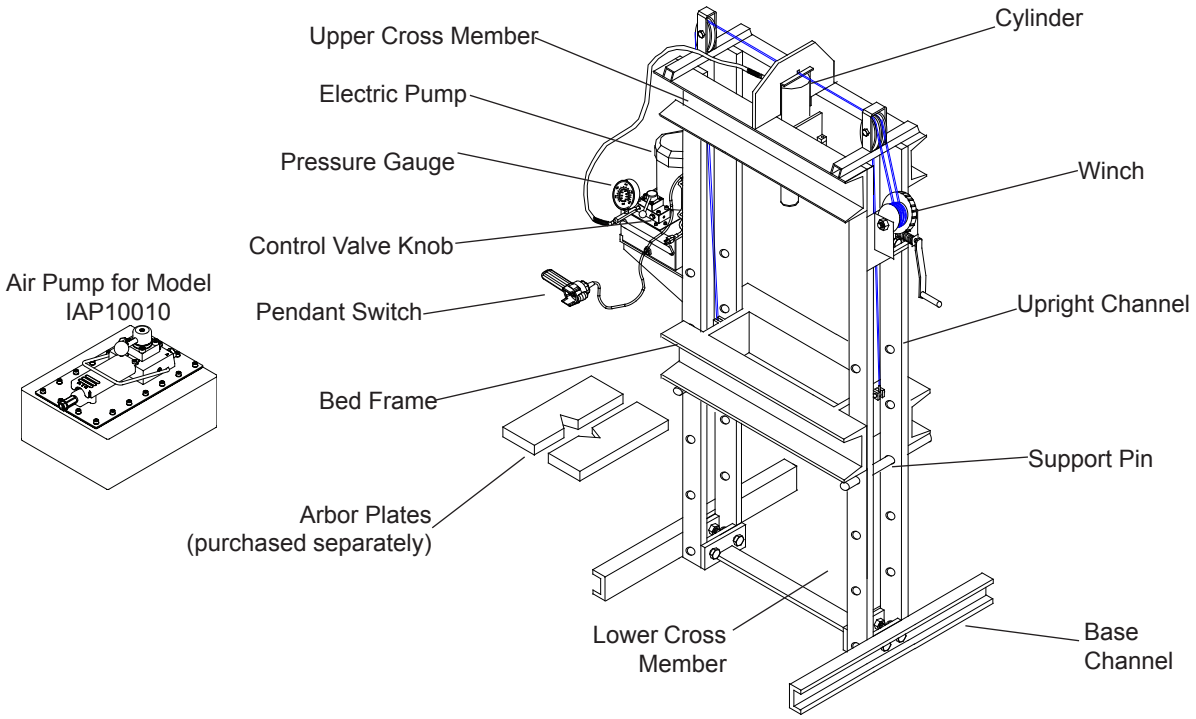

Figure 2 - Components for 100 Ton Press (Model IEP10010)

ASSEMBLY

1. Ensure bed frame at lowest position and winch cable is slack.
2. Install the winch assembly to the press using 3 bolts, washers and nuts (ref. Figs 2 & 3).
3. Secure cylinder to cylinder adapter plate, and mount the adapter plate to upper cross member using 4 bolts and washers.

NOTICE: *The cylinder comes with carrying handles, simply loosen the Allen head socket screw to remove the handles.*

4. Attach base sections to upright channels with 4 bolts and nuts.
5. Attach lower cross member to upright channels with 4 bolts and nuts.
6. *For 55 Ton Models only*: adjust the pump bracket to desired height and secure with bolts, nuts & washers provided.
7. Connect pressure gauge and hydraulic hose to the gauge adapter, then connect the gauge adapter to pump.
8. *For Models IEPD5513, IEPD10010 & IEPDS10010 only:* Attach second hose to Port B on Control Valve. Attach second coupler to free hose end. Connect coupler to bottom port on Cylinder.

NOTICE: *Ensure thread tape or compound is used on connections.*

8. Place the pump on the pump bracket and connect the other end of hydraulic hose to cylinder.

CAUTION: *Before disassembling, slide bed frame section down to its lowest position.*

OPERATION

WARNING: *Shop presses can present a projectile hazard. Ensure workpiece is center loaded and secure. Reduce risk of flying debris by following all operating instructions. Know your press and hazards associated with its use. Keep hands and feet from bed area at all times.*

WARNING: *Risk of serious eye injury from projected or blown debris. Reduce risk by wearing safety goggles when working with or around press.*

1. Insert the support pins to desired height, then lower the bed frame using the winch until the cable is slack and the bed frame is resting fully on the support pins.
2. Place arbor plates on the bed frame (optional).
3. Place workpiece on bed frame, using every precaution necessary to ensure your safety and prevent property damage.
4. Operate the pump:
   a) *For Model IMP5506 (manual)*: Close the release valve by turning it clockwise, and pump the handle to extend the cylinder ram. To retract, simply open the release valve of pump.
   b) *For Models IAP5506, IAP5513 & IAP10010 (air)*: Connect to suitable air supply, press on the foot pedal to extend the cylinder ram. To retract, simply press the release valve by stepping on the raised, stirrup shaped portion of the foot pedal.
   c) *For Models IEP5506, IEP55513, IEPD5513, IEP10010, IEPD10010 & IEPDS10010 (electric)*: Toggle the ON/OFF switch to start the electric pump and let the pump idle for a few minutes before putting into operation. Use control valve knob to extend or retract the cylinder ram.

WARNING: *Burst hazard exists if hose or connection pressure exceeds rated pressure. Always monitor the pressure gauge while in operation and never leave loaded press unattended.*

NOTICE: *The power retract feature of the IEPD5513, IEPD10010 & IEPDS10010 Shop Presses is not intended to be used under load. Never pull or raise a workpiece with the power retract feature.*

NOTICE: *Never operate pump with hose disconnected from cylinder. If operated in this condition, the hydraulic hose and connections become pressurized. This increases burst hazard.*

5. Apply load to workpiece. **Do not overload the workpiece.**
6. Stabilize workpiece in a manner which will not allow it to inadvertently fall from the bed once the load is removed.
7. Once cylinder has fully retracted, remove workpiece.

NOTICE: *To protect your cylinder, do not continue to operate pump after cylinder plunger is fully extended or retracted.*

MAINTENANCE

Please refer to cylinder and pump's manuals for maintenance and how to add/change hydraulic oil. For best results, change the oil once a year. Use only good quality hydraulic oil. Mobil DTE13M or equivalent is recommended for manual and air pumps, BVA hydraulic oil or equivalent for electric pump.

Lubrication

A periodic coating of light lubricating oil to pivot points and hinges will help to prevent rust and assure assemblies move freely.

Storage

Depressurize the hydraulic system, disconnect the hydraulic hose and lower the bed frame to lowest position. Disconnect both hoses on the IEPD5513, IEPD10010 & IEPDS10010 Double Acting Shop Presses.

TROUBLESHOOTING

A system failure may or may not be the result of a pump malfunction. The following information is intended to be used as an aid in determining if a problem exist.

Symptom	Possible Causes	Corrective Action
Erratic Ram Performance	• Air in system or pump cavitation • External leak • Internal hydraulic leak	• Follow pump instructions for bleeding air • Tighten all connections • Contact Service Center
Pump or ram fails to maintain pressure	• Overload condition • External leak • Internal hydraulic leak • Ram seals leaking • Pump or valve malfunctioning	• Remedy overload condition • Tighten all connections • Contact Service Center • Contact Service Center • Check pump operating instructions
Ram extends partially	• Hydraulic oil level too low in pump • Load is above the capacity of system • Ram is sticking or binding	• Fill and bleed the system • Match the capacity to application • Contact Service Center
Slow ram movement	• Loose connection or coupler • Restricted hydraulic line or fitting • Pump not working correctly • Ram seals leaking	• Tighten connection or coupler • Clean and replace if damaged • Check pump operating instructions • Replace cylinder
Ram leaks hydraulic fluid	• Worn or damaged seals	• Contact Service Center
Ram will not retract or retracts slower than normal	• Linkage binding • Loose couplers • Malfunctioning coupler • Weak or broken retraction springs • Ram damaged internally • Pump reservoir too full	• Lubricate all moving parts • Tighten couplers • Depressurize pump and hose, remove application, then replace a new coupler • Contact Service Center • Contact Service Center • Drain hydraulic fluid to correct level
Motor will not start (for Model IEP5506, IEP5513, IEPD5513, IEP10010, IEPD10010, & IEPDS10010)	• No power or wrong voltage • Damaged power cord • Tripped circuit breaker • Loose or faulty wiring	• Check the power supply & voltage • Contact Customer Service • Make sure breaker is of adequate size • Contact Customer Service
Motor cuts out (for Model IEP5506, IEP5513, IEPD5513, IEP10010, IEPD10010 & IEPDS10010)	• Extension cord too long • Faulty motor • Overheated motor can trip circuit breaker	• Replace with shorter cord • Replace or repair • Allow motor to cool, reset circuit breaker

Shop Press Service Parts

INCLUDES MODELS: IAP5506, IEP5506, IMP5506, IAP5513, IEP5513 & IEPD5513

SFA Companies 10939 N. Pomona Ave. Kansas City, MO 64153
Tel: 888-332-6419 * Fax: 816-891-6599
E-mail: sales@bvahydraulics.com Website: www.bvahydraulics.com

Note: Not all components of the press are replacement items, but are illustrated as a convenient reference of location and position in the assembly sequence.

Parts Illustration

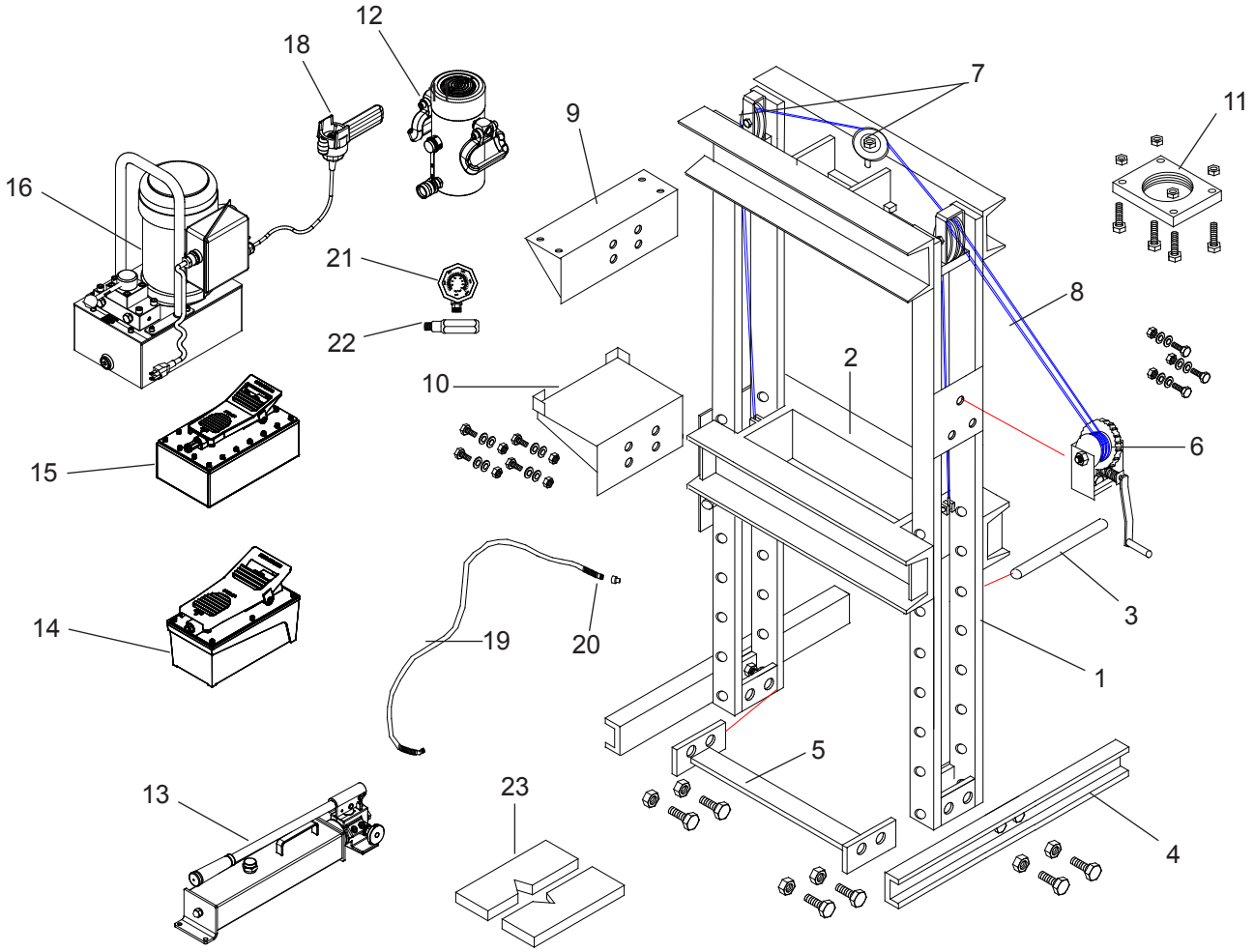

Figure 3- Replacement Parts Illustration for Models IAP 5506, IEP5506, IMP5506, IAP5513, IEP5513 & IEPD5513

Shop Presses Service Parts

MODELS: IMP5506, IAP5506, IEP5506, IAP5513, IEP5513 & IEPD5513

SFA Companies 10939 N. Pomona Ave. Kansas City, MO 64153
Tel: 888-332-6419 * Fax: 816-891-6599
E-mail: sales@bvahydraulics.com Website: www.bvahydraulics.com

Note: Not all components of the press are replacement items, but are illustrated as a convenient reference of location and position in the assembly sequence.

Parts List

Item	Part No. for Model						Description	Qty
	IMP5506	IAP5506	IAP5513	IEP5506	IEP5513	IEPD5513		
1	N/A						Press Frame w/Winch and Pump Brackets	1
2	N/A						Bed Frame	1
3	400-002-003						Support Pin	2
4	IEP-001-004						Frame Base Channel	2
5	IEP-001-005						Lower Cross Member	1
6	400-002-006						Winch	1
7	400-002-007						Cable Sheaves (Pulley)	3
8	400-002-008						Cable	2
9	IEP-001-009	N/A					Hand Pump Platform Bracket	1
10	N/A	IEP-001-011					Air/Electric Pump Bracket	1
11	IEP-002-012						Cylinder Adapter Plate	1
12a	H5506		N/A	H5506	N/A		Single Acting Cylinder, 55 Ton 6” Stroke	1
12b	N/A		H5513	N/A	H5513	N/A	Single Acting Cylinder, 55 Ton 13” Stroke	1
12c	N/A					HD5513	Double Acting Cylinder, 55 Ton 13” stroke	1
13	P2301	N/A					Pump, Manual	1
14	N/A	PA1500	N/A				Pump, Air, 91.5 in^3	1
15	N/A		PA3801	N/A			Pump, Air, 232 in^3	1
16	N/A			PEW0501T		PEWM0501T	Pump, Electric, 0.5 hp	1
17	300-002-016	N/A					Pump Mounting Hardware Kit	1
18	N/A			PEW01			Pendant Switch	1
19	CS3838	CS3838C		CS3838			Hydraulic Hose	1*
20	CH38M						Male Coupler	1*
21	GW4014						Pressure Gauge, 4”, Wet	1
22	CF3814						Gauge Adapter	1
23	AP55						Arbor Plates	1

* Qty 2 for IEPD5513 Double Acting Presses

Shop Presses Service Parts

MODEL NUMBER: IAP10010, IEP10010, IEPD10010 & IEPDS10010

SFA Companies 10939 N. Pomona Ave. Kansas City, MO 64153
Tel: 888-332-6419 * Fax: 816-891-6599
E-mail: sales@bvahydraulics.com Website: www.bvahydraulics.com

Note: Not all components of the press are replacement items, but are illustrated as a convenient reference of location and position in the assembly sequence.

Parts Illustration

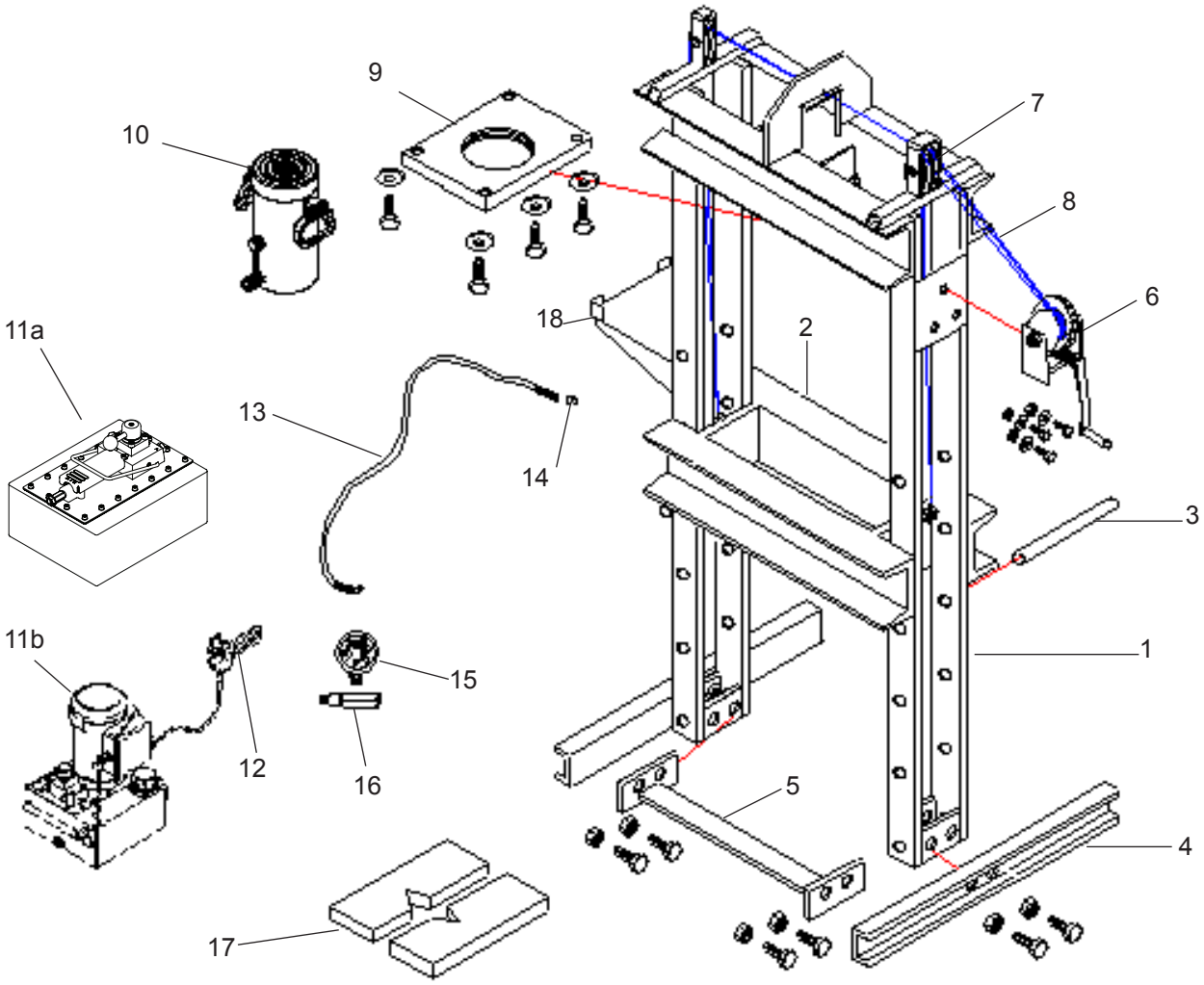

Figure 4- Replacement Parts Illustration for Models IAP10010, IEP10010, IEPD10010 & IEPDS10010

Shop Presses Service Parts

MODELS: IAP10010, IEP10010, IEPD10010 & IEPDS10010

SFA Companies 10939 N. Pomona Ave. Kansas City, MO 64153
Tel: 888-332-6419 * Fax: 816-891-6599
E-mail: sales@bvahydraulics.com Website: www.bvahydraulics.com

Note: Not all components of the press are replacement items, but are illustrated as a convenient reference of location and position in the assembly sequence.

Parts List

Item	Part No. for Model				Description	Qty
	IAP10010	IEP10010	IEPD10010	IEPDS10010		
1	N/A				Press Frame w/Winch and Pump Bracket	1
2	N/A				Bed Frame	1
3	610-002-003				Support Pin	2
4	IEP-002-004				Frame Base Channel	2
5	IEP-002-005				Lower Cross Member	1
6	400-002-006				Winch	1
7	400-002-007				Cable Sheaves (Pulley)	3
8	610-002-008				Cable	2
9	IEP-002-009				Cylinder Adapter Plate	1
10a	H10010		N/A		Single Acting Cylinder, 100 ton, 10” Stroke	1
10b	N/A		HD10010		Double Acting Cylinder, 100 ton, 10” Stroke	1
11a	PA7550	N/A			Pump, Air, 460.6 in^3	1
11b	N/A	PEW1002T	PEWM1002T	PESML1002T	Pump, Electric, 1 hp	1
12	N/A	PEW01		N/A	Pendant Switch	1
13	CS3838C	CS3838			Hydraulic Hose	1*
14	CH38M				Male Coupler	1*
15	GW4014				Pressure Gauge, 4”, Wet	1
16	CF3814				Gauge Adapter	1
17	AP100				Arbor Plates	1
18	IEP-001-011				Electric Pump Bracket	1

* Qty 2 for IEPD10010 & IEPDS10010 Double Acting Presses

LIMITED LIFETIME WARRANTY

BVA Hydraulics®, represented in the United States by **SFA Companies** [“SFA”] warrants this product to be free from defects in material and workmanship for the life of the product as long as the original purchaser owns the product. The warranty is non-transferable and is subject to the terms, exclusions, and limitations described below:

- Damaged components, including but not limited to bent rams, dented or crushed cylinder walls, broken welds or couplers as well as worn out seals, o-rings and springs are the result of misuse and not covered by warranty and BVA Hydraulics will not provide any warranty credit for such damaged components.
- This warranty does not cover ordinary wear and tear, overloading, alterations (including repairs or attempted repairs not performed by BVA Hydraulics or one of its authorized personnel), improper fluid use, or use of the product in any manner for which the product was not intended or the use of which is not in accordance with the instructions or warnings provided with the product.
- In the unlikely event that a BVA Hydraulics product fails due to material defect in workmanship, you may contact SFA Companies for disposition. In such cases, the customer’s sole and exclusive remedy for any breach or alleged breach of warranty is limited to the repair or replacement of the defective product.
- Under no circumstances is BVA Hydraulics liable for any consequential or incidental damage or loss whatsoever.
- THIS WARRANTY IS LIMITED TO NEW PRODUCTS SOLD THROUGH AUTHORIZED DISTRIBUTORS AND OTHER CHANNELS DESIGNATED BY BVA HYDRAULICS. NO AGENT, EMPLOYEE OR OTHER REPRESENTATIVE OF BVA HYDRAULICS IS AUTHORIZED TO MODIFY THIS WARRANTY.
- THE FOREGOING IS EXCLUSIVE AND IS IN LIEU OF ALL OTHER EXPRESS AND IMPLIED WARRANTIES, INCLUDING BUT NOT LIMITED TO THE IMPLIED WARRANTIES OF MERCHANTABILITY AND FOR A FITNESS FOR A PARTICULAR PURPOSE.
- Components not manufactured by BVA Hydraulics including certain motor systems, gasoline engines, and other are not covered by this warranty and instead are covered by the manufacturer’s separate manufacturer’s warranty provided in the package.
- BVA Hydraulics’ liability in all cases is limited to, and will not exceed the purchase price paid for the product.

SFA Companies
10939 N. Pomona Ave. Kansas City, MO 64153
Tel: 888-332-6419
E-mail: sales@bvahydraulics.com

SFA Companies
10939 N. Pomona Ave. Kansas City, MO 64153
Tel: 888-332-6419
E-mail: sales@bvahydraulics.com