HEIN-WERNER AUTOMOTIVE®

Engine Stand

Operating Instructions & Parts Manual

Model Number	Capacity
HW93776	3 Ton

Made in the U.S.A.

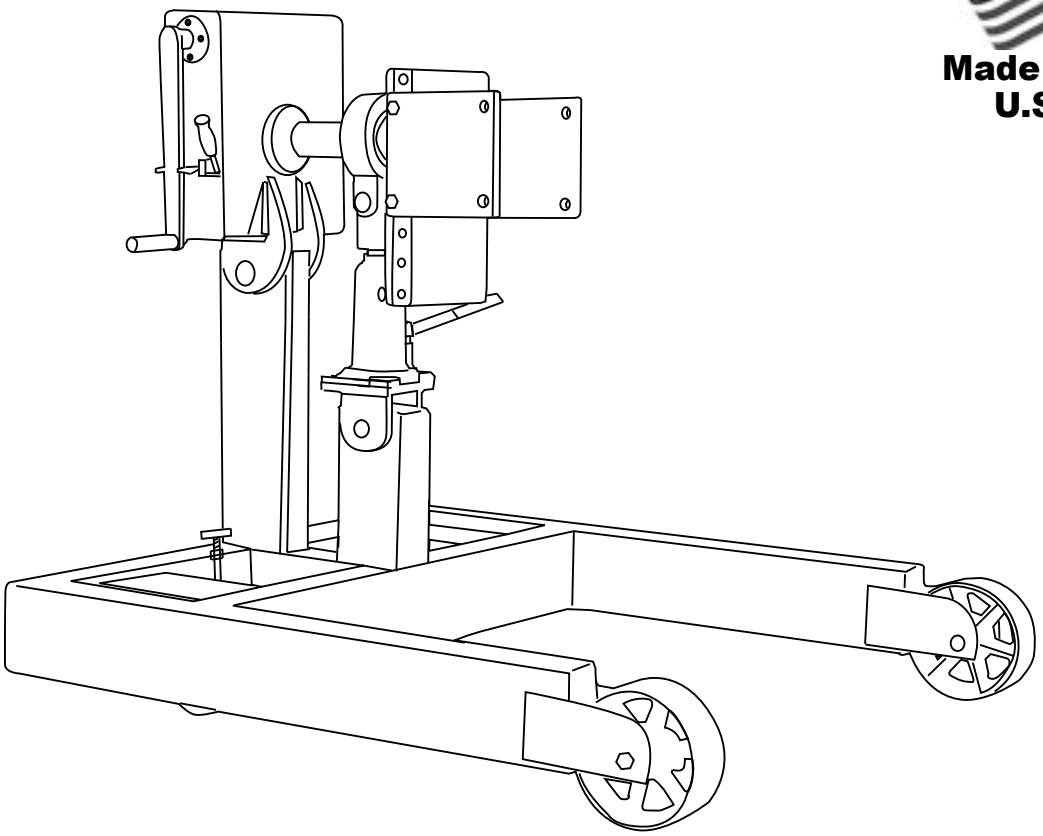

This is the safety alert symbol. It is used to alert you to potential personal injury hazards. Obey all safety messages that follow this symbol to avoid possible injury or death.

⚠ **WARNING:** Cancer and Reproductive Harm.
⚠ **AVERTISSEMENT:** Cancer et dommages au système reproducteur.
⚠ **ADVERTENCIA:** Cáncer y daño reproductivo.
www.P65Warnings.ca.gov

SFA Companies
10939 N. Pomona Ave. Kansas City, MO 64153
customerservices@heinwerner-automotive.com

Read this manual and follow all the Safety Rules and Operating Instructions before using this product.

HW93776-M0 rev 102018

SAFETY AND GENERAL INFORMATION

Save these instructions. For your safety *read, understand, and follow* the information provided with and on this stand before using. The owner and operator of this equipment shall have an understanding of the stand and safe operating procedures before attempting to use. The owner and operator shall be aware that use of this product may require special skills and knowledge. Instructions and safety information shall be conveyed in the operator's native language before use of this stand is authorized. If any doubt exists as to the safe and proper use of this stand, remove from service immediately.

Inspect before each use. Do not use if broken, bent, cracked, or damaged parts (including labels) are noted. Any stand that appears damaged in any way, operates abnormally or is missing parts, shall be removed from service immediately. If you suspect that the stand was subjected to a shock load (a load applied suddenly, unexpectedly upon it), immediately discontinue use until the stand has been checked by a factory authorized service center (contact distributor or manufacturer for list of Authorized Service Centers). It is recommended that an annual inspection be done by qualified personnel. Labels and owner's manuals are available from manufacturer.

PRODUCT DESCRIPTION

Hein-Werner Engine stand is designed to safely move and support a rated capacity automotive engine, during that time that the engine is being rebuilt or repaired.

⚠ **WARNING:** *Do not use for any purpose other than those uses outlined above!*

SPECIFICATIONS

Model	Capacity	Overall Size (L x W x H)	Rotational Clearance (from Mounting Head Axle to Ground)	Weight
HW93776	3 Ton	52" x 47" x 46"	37" to 43-1/2"	602 lbs.

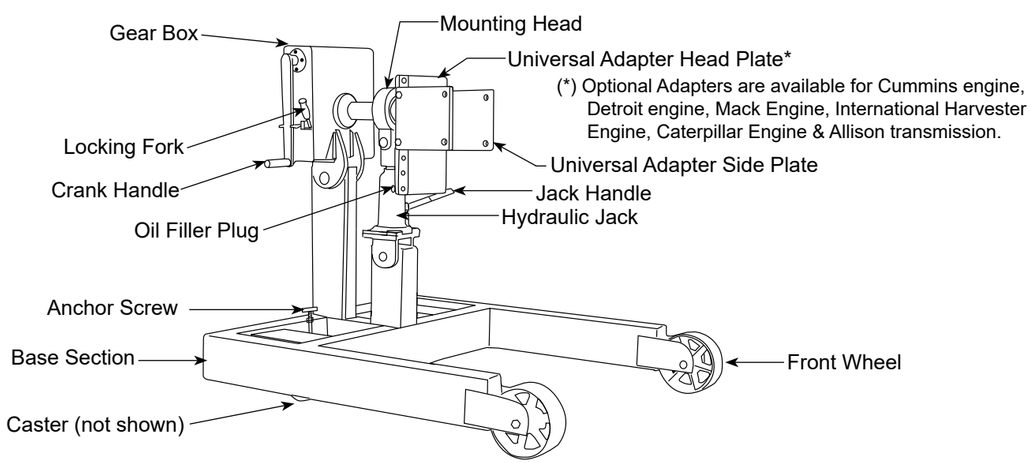

Figure 1 - HW93776 Engine Stand Components

BEFORE USE

1. Before using this product, read the owner's manual completely and familiarize yourself thoroughly with the product and the hazards associated with its improper use.
2. Verify that the product and the application are compatible, if in doubt call Hein-Werner Technical Service (816) 891-6390.
3. Inspect engine stand before each use. Do not use if there are bent, broken or cracked components (including labels).
4. Ensure that casters/wheels and adapter plate rotate freely. Check for and tighten any loose assemblies.

⚠ WARNING

- Study, understand, and follow all instructions before operating this device.
- Do not exceed rated capacity.
- Use only on a hard, level surface.
- Off- center loads may make the load and handle rotate in either direction when the rotational locking device is released.
- Release rotational locking devices slowly and carefully.
- No alterations shall be made to this product.
- Only attachments and/or adapters supplied by the manufacturer shall be used.
- Failure to heed these markings may result in personal injury and/or property damage.

⚠ WARNING

To avoid crushing and related injuries: NEVER work under a loaded stand. Keep body from underneath engine.

⚠ ADVERTENCIA

- Leer, comprender, y seguir las instrucciónes antes de utilizar el aparato.
- El manual de instrucciónes y la información de seguridad deben estar comunicado en lengua del operador antes del uso.
- No seguir estas indicaciónes puede causar daños personales o materiales.

SET UP

1. This engine stand is equipped with a universal adapter which can be configured to fit most engines. Optional adapters are available, refer to replacement parts section.
2. Determine the correct adapter for the engine you are working on and tighten all hardware that attaches the adapter to the engine stand's mounting head.
3. Occasionally hydraulic jacks become air-bound and will not function properly. To correct this condition:
   a. Open release valve with notched end of jack handle by turning it counter-clockwise no more than 1/2 turn.
   b. With ram piston fully retracted, remove oil filler plug.
   c. Insert jack handle into handle socket, then pump 6 to 8 strokes. This will allow any pressurized air to escape.
   d. Ensure oil level is even with or just below the oil filler plug hole before re-installing the oil filler plug.

OPERATION

WARNING: ***Always*** *verify that the product and the application are compatible.* ***Never*** *load the engine stand with an engine that extends beyond an imaginary boundary drawn by connecting the centers of the front and rear wheel/ caster axles as show in Figure 2.*

1. Familiarize yourself with the operating features of the engine stand:
   a. Crank Handle: To rotate the head plate and engine 360 degrees if necessary.
   b. Locking Fork: To lock the crank handle in position before moving the engine stand and/or working on an engine.
   c. Hydraulic Bottle Jack: It is used to raise the engine stand mounting head for additional clearance when the engine is rotated.
   d. Anchor Screw: It is a floor lock that keeps the stand from moving during repairs.
   e. Universal Adapter includes a head plate which bolts to the mounting head and two side plates which bolt to the sides of the head plate.
2. Lift the engine with proper equipment; for instance, engine crane. Install optional engine adapter if necessary.
3. Remove the universal adapter side plates from the head plate and bolt them to the engine or optional engine adapter. Do not tighten these bolts yet.

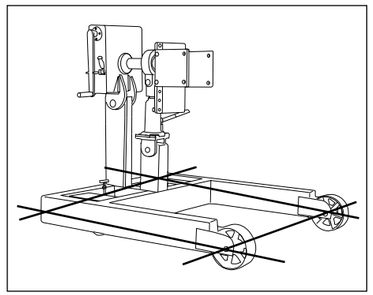

Figure 2

WARNING: *Use original engine mounting bolts or hardened, appropriate sized bolts to secure engine to stand.*

4. Align the side plates on the engine with the head plate on the engine stand.
5. Align the closest tapped holes in the sides of the head plate with the holes of the side plates and secure them together with bolts provided.
6. Ensure the load/engine is centered on the engine stand.
7. Tighten all hardware and **lock the rotating mechanism** by engaging the crank handle with locking fork before removing the support and lifting equipment from the engine.
8. Ensure the anchor screw floor lock is engaged before operating the engine stand and/or repairing the engine.
9. To rotate the engine, disengage the locking fork and rotate the engine slowly and carefully with crank handle.
10. To tilt the engine for additional clearance when rotating the engine, operate the hydraulic bottle jack:
    a. To raise: Using notched end of jack handle, close release valve by turning it clockwise firmly. Pump the jack until desired height is reached.
    b. To lower: Using notched end of jack handle, slowly open release valve by turning it counter-clockwise no more than 1/2 turn.
11. After the engine is in proper working position, lock the crank handle in place and lower the mounting head to its lowest possible position. Keep the jack at its lowest possible position in order to avoid tipping while working on the stand.
12. Ensure that engine stand is secure before working on or around. ***Never*** work under loaded stand.

WARNING: ***Never*** *put any portion of your body under engine when it is supported by the engine stand.* ***Do not*** *move loaded stand off hard smooth, level surface!*

MAINTENANCE

Periodically inspect the engine stand. Ensure all parts move freely. Lubricate wheels and casters periodically. To help prevent rust, wipe clean after each use. If rust appears, sand affected area and cover with suitable utility paint.

Hydraulic Jack

NOTICE: *Use a quality grade hydraulic jack oil. Avoid mixing different types of fluid and never use brake fluid, turbine oil, transmission fluid, motor oil or glycerin. Improper fluid can cause failure of the jack and the potential for sudden and immediate loss of load. Hein-Werner hydraulic jack oil HW93291 or equivalent is recommended.*

Adding oil

1. Remove hydraulic jack from **UNLOADED** stand.
2. Lower saddle fully, set jack in its upright, level position.
2. Locate and remove oil filler plug.
3. Fill with oil even with the bottom of oil filler plug hole. Reinstall oil filler plug.

Changing oil

NOTICE: *For best performance and longest life, replace the complete hydraulic fluid at least once per year.*

1. Remove jack from stand.
2. Lower saddle fully and remove oil filler plug.
3. Lay jack on its side and drain fluid into a suitable container.

NOTICE: *Dispose of hydraulic fluid in accordance with local environmental regulations.*

4. Fill with oil even with the bottom of oil filler plug hole. Reinstall oil filler plug.

Lubrication

A periodic coating of light lubricating oil to pivot points will help to ensure that pump piston linkages move freely.

NOTICE: *Never apply oil to the saddle.*

Cleaning

Periodically check the pump piston and ram for signs of rust or corrosion. Clean as needed and wipe with an oily cloth.

NOTICE: *Never use sandpaper or abrasive material on pump piston or ram.*

REPLACEMENT PARTS

Not all components of the stand are replacement items, but are illustrated as convenient reference of location and position in the assembly sequence. When ordering parts, give Model number, serial number and parts description. Contact Hein-Werner Customer Support for current pricing, 10939 N. Pomona Ave. Kansas City, MO 64153. Tel :(816) 891-6390 E-mail: customerservices@heinwerner-automotive.com

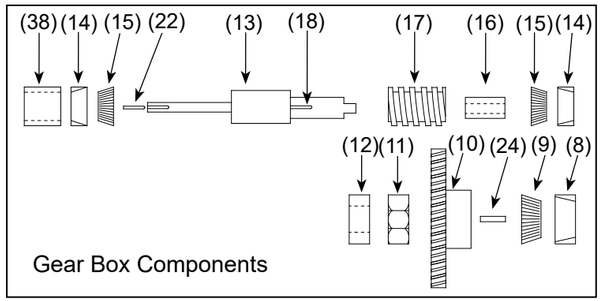

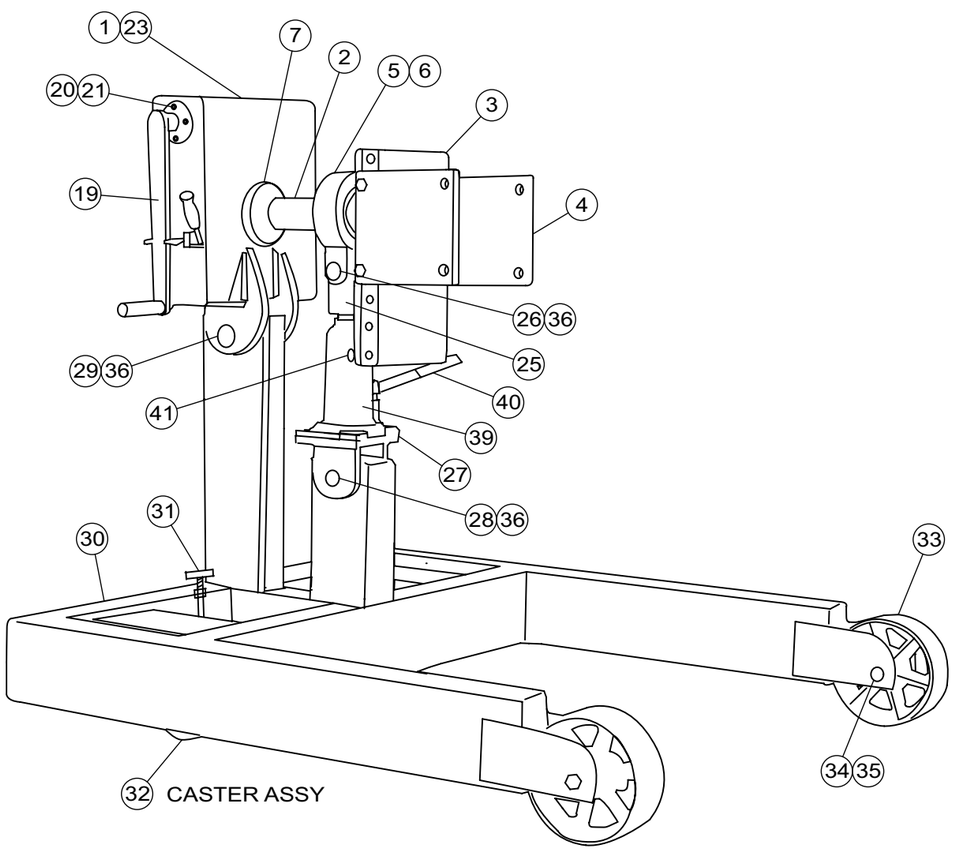

Figure 3 - Parts Illustration for HW93776 Engine Stand

Optional Adapters:

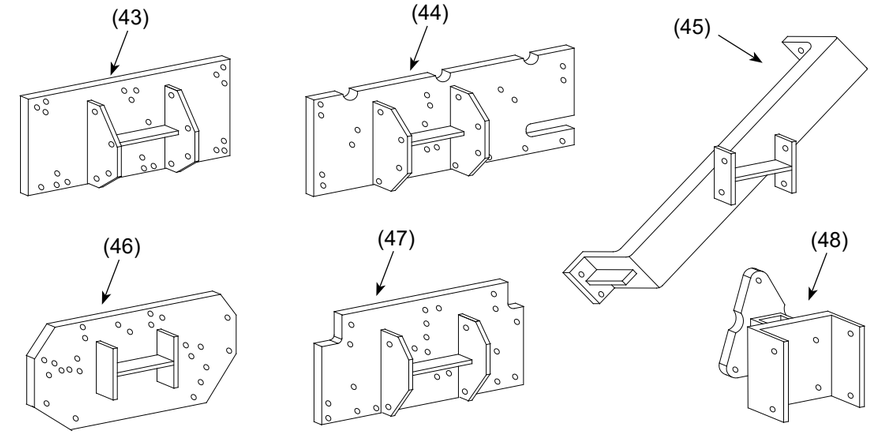

Figure 4 - Illustration for Optional Adapters

Replacement Parts List for HW93776 Engine Stand

Item	Part#	Description	Qty
1	776-002-001	Gear Box only	1
2	776-002-002	Drive shaft	1
3	776-002-003	Universal Adapter	1
4	776-002-004	Side Plates	2
5	776-002-005	Pillow Block Housing	1
6	776-002-006	Pillow Block Bearing ER39	1
7	776-002-007	Thrust Bearing D21	1
8	776-002-008	Bearing Race 25520	1
9	776-002-009	Tapered Bearing	1
10	776-002-010	Worm Gear	1
11	776-002-011	Jam Nut	1
12	776-002-012	Ball Bearing 1654-2RS	1
13	776-002-013	Worm Shaft	1
14	776-002-014	Bearing Race 17520	2
15	776-002-015	Tapered Bearing 17580	2
16	776-002-016	Spacer	1
17	776-002-017	Worm	1
18	776-002-018	Key	1
19	776-002-019	Crank Handle	1
20	776-002-020	Bearing Retainer	1
21	776-020-021	Bearing Retainer Bolts	4
22	776-002-022	Key	1
23	776-002-023	Gear Box Back Cover	1
24	776-002-024	Worm Gear Key	1
25	776-002-025	Jack Saddle Block	1

Item	Part#	Description	Qty
26	776-002-026	Jack Saddle Block Pin	1
27	776-002-027	Jack Bracket	1
28	776-002-028	Jack Bracket Pin	1
29	776-002-029	Gear Box Pin	1
30	N/A	Base Assembly	1
31	776-002-031	Anchor Screw Assembly	1
32	776-002-032	Caster Assembly	2
33	776-002-033	8" Steel Wheel Assembly	2
34	776-002-034	Wheel Axle	2
35	776-002-035	Axle Retainer Ring	4
36	776-002-036	Pin Retainer Ring	6
37	776-002-037	Gear Box Cover Bolts	8
38	776-002-038	Spacer	1
39	10120	Hyd. Jack, 12 Ton	1
40	B10N-21000-000	Jack Handle	1
41	F36100-0001	Oil Filler Plug	1
42	B12A0S-035	Seal Kit for Hyd. Jack	1
Optional Adapters: (not included with Engine Stand)			
43	HW93776-1	Cummins Engine	-
44	HW93776-2	Detroit Engine	-
45	HW93776-3	Mack Engine	-
46	HW93776-4	International Harvester Engine	-
47	HW93776-5	Caterpillar Engine	-
48	HW93776-6	Allison Transmission	-

TWO YEARS LIMITED WARRANTY

For a period of two (2) years from date of purchase, SFA Companies will repair or replace, at its option, without charge, any of its products which fails due to a defect in material or workmanship under normal usage. This limited warranty is a consumer's exclusive remedy.

Performance of any obligation under this warranty may be obtained by returning the warranted product, freight prepaid, to SFA Companies Warranty Service Department, 10939 N. Pomona Ave., Kansas City, MO 64153.
Except where such limitations and exclusions are specifically prohibited by applicable law:

(1) THE CONSUMER'S SOLE AND EXCLUSIVE REMEDY SHALL BE THE REPAIR OR REPLACEMENT OF DEFECTIVE PRODUCTS AS DESCRIBED ABOVE
(2) SFA COMPANIES SHALL NOT BE LIABLE FOR ANY CONSEQUENTIAL OR INCIDENTAL DAMAGE OR LOSS WHATSOEVER.
(3) ANY IMPLIED WARRANTIES, INCLUDING WITHOUT LIMITATION THE IMPLIED WARRANTIES OF MERCHANTABILITY AND FITNESS FOR A PARTICULAR PURPOSE, SHALL BE LIMITED TO TWO YEARS, OTHERWISE THE REPAIR, REPLACEMENT OR REFUND AS PROVIDED UNDER THIS EXPRESS LIMITED WARRANTY IS THE EXCLUSIVE REMEDY OF THE CONSUMER, AND IS PROVIDED IN LIEU OF ALL OTHER WARRANTIES, EXPRESS OR IMPLIED.
(4) ANY MODIFICATION, ALTERATION, ABUSE, UNAUTHORIZED SERVICE OR ORNAMENTAL DESIGN VOIDS THIS WARRANTY AND IS NOT COVERED BY THIS WARRANTY.

Some states do not allow limitations on how long an implied warranty lasts, so the above limitation may not apply to you. Some states do not allow the exclusion or limitation of incidental or consequential damages, so the above limitation or exclusion may not apply to you. This warranty gives you specific legal rights, and you may also have other rights which vary from state to state.

SFA Companies
10939 N. Pomona Ave. Kansas City, MO 64153
816-891-6390
customerservices@heinwerner-automotive.com