Shop Press

Operating Instructions & Parts Manual

Model Number	Capacity
HW93300,(hand operated pump)	
HW93301 (air operated pump)	
HW93302,(electric pump)	25 Ton
HW93305,(double acting, hand operated pump)	
HW93306,(double acting, electric pump)	

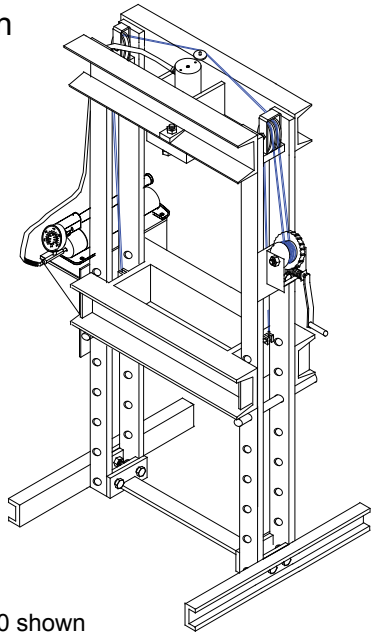

Model HW93300 shown

This is the safety alert symbol. It is used to alert you to potential personal injury hazards. Obey all safety messages that follow this symbol to avoid possible injury or death.

WARNING

To avoid crushing and projectile injuries:
- *An ASME B15.1-2000 compliant guard shall be installed on this device before use.*
- *Wear personal protective equipment when operating this equipment.*

SFA Companies
10939 N. Pomona Ave. Kansas City, MO 64153
customerservices@heinwerner-automotive.com

Read this manual and follow all the Safety Rules and Operating Instructions before using this product.

HW93300-M0_032013
Printed in U.S.A

⚠ WARNING

- *Study, understand, and follow all instructions before operating the device.*
- *Do not exceed rated capacity.*
- *Prior to use, make sure press is securely anchored.*
- *The press shall be installed and operated in accordance with federal (OSHA), state and local safety standards.*
- *Operators and observers shall wear eye protection that meets ANSI Z87.1 and OSHA standards.*
- *Keep hands, arms, feet and legs out of the work area. Accidental slippage can result in personal injury.*
- *Use appropriate guarding to contain any pieces that may break or fly apart when applying force.*
- *Use only press accessories having a capacity rating equal to or greater than the capacity of the press.*
- *Verify lift cables are slack before pressing on the bolster.*
- *Avoid off-center loads.*
- *No alterations shall be made to the product.*
- *Failure to heed and understand these instructions and markings may result in personal injury, property damage or both.*

SAFETY AND GENERAL INFORMATION

Save these instructions. For your safety, read and understand the information contained within. The owner and operator shall have an understanding of this product and safe operating procedures before attempting to use this product. Instructions and safety information shall be conveyed in operator's native language before use of this product is authorized. Make certain that the operator thoroughly understands the inherent dangers associated with the use and misuse of this product. If any doubt exists as to the safe and proper use of the product as outlined in this manual, remove from service immediately.

Inspect before each use. Do not use if broken, bent, cracked or otherwise damaged parts are noted. If any component of this product has been or suspected to have been subjected to a shock load (a load applied suddenly, unexpectedly upon it), discontinue use until checked out by qualified personnel such as an Authorized Service Center. Owners and operators of this equipment shall be aware that the use and subsequent repair of this equipment may require special training and knowledge. It is recommended that an annual inspection be done by qualified personnel and that any missing or damaged parts, decals, warning/safety labels or signs be replaced with factory authorized replacement parts only. Any component of this Equipment that appears to be damaged in any way, is worn or operates abnormally shall be removed from service immediately until such time as it can be repaired/replaced. Labels and Instruction Manuals are available from manufacturer.

PRODUCT DESCRIPTION

Hein-Werner Shop presses are designed for automotive, truck, implement, fleet, and industrial repair shops where pressing, bending, straightening, forming is required. Each press includes a cylinder and a pump. A winch assembly provides a safe and efficient way to raise and lower the bed frame, and a pressure gauge which provides for monitoring the applied press force. Typical applications include installation and removal of alternator and power steering pump bearings, axle bearings, transmission bearings, seal, driveshaft bearings and u-joints and others.

WARNING: *Wear personal protective gear when operating this equipment.*

⚠ **WARNING:** *Avoid damaging hydraulic hose. Do not allow hose to kink, twist, curl, crush, cut or bend so tightly that fluid flow within the hose is blocked or reduced. Periodically inspect the hose for wear. To reduce the risk of personal injury and/or property damage, ensure rated working pressure of each pressurized attachment is equal to or greater than rated working pressure of pump.*

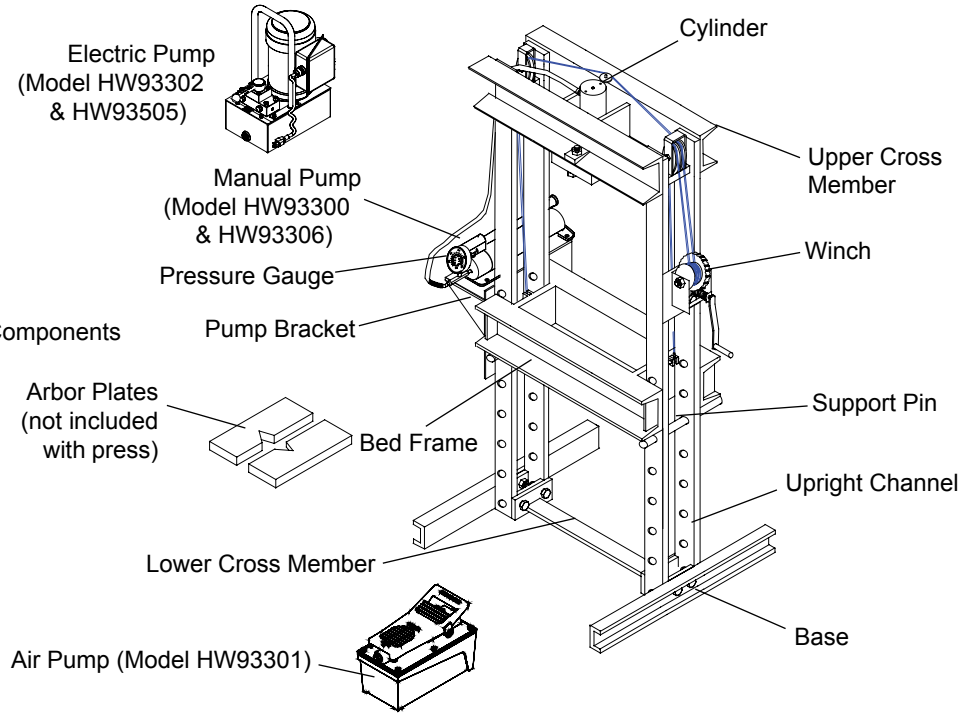

Figure 1 - Typical Shop Press Components

SPECIFICATIONS

Press Model	Rated Capacity (tons)	Pump Model/ Type	Press Bed Depth (front to back)	Press Bed Width (side to side)	Press Size (H" x W" x L")	Min. Work Height (in)	Max. Work Height (in)
HW93300	25	P1000	11-1/2"	29-3/4"	71 x 44 x 30	5-1/2	47-1/2
HW93301		PA1500					
HW93302		PE0501T					
HW93305		P2301M					
HW93306		PEM0501T					

Cylinders

Cylinder Model	Rated Capacity (ton)	Effective Area (in^2)	Oil Volume (in^3)	Stroke (in)	Outer Dia. (in)	Ram Dia. (in)	Saddle Dia. (in)	Collar Thread	Collar Thread Length (in)
H2506	25	5.14	30.53	6	3.35	2.24	1.97	3-5/16"-12 UNC	1.93
HD2506			30.53			1.77	1.50		0.98

Manual Pumps (Hand Pumps)

Hand Pump Model	Usable Oil Volume (in^3)	Pressure Rating (psi)		Oil Displacement (in^3)		Oil Outlet Port Thread	Weight (lbs)
		1st Stage	2nd Stage	1st Stage	2nd Stage		
P1000	61.0	200	10,000	0.81	0.14	3/8"-18 NPTF	13.2
P2301M	128.0						32.3

Air Pumps

Air Pump Model	Usable Oil Volume (in^3)	Pressure Rating (psi)	Oil Output Flow Rate (in^3/min)		Input Air Pressure Range (psi)	Weight (lbs)
			No Load	Load		
PA1500	91.5	10,000	66	11	110 - 175	18.1

Electric Pumps

Electric Pump Model	Reservoir Capacity (gal)	Pressure Rating (psi)		Oil Output Flow Rate (in^3/min)		Valve Type	Motor Size (hp)	Current Draw (A)	Motor Voltage (V)	Weight (lbs)
		1st Stage	2nd Stage	1st Stage	2nd Stage					
PE0501T	1	350	10,000	293	18	3-way, 3-pos	0.5	9	115/125	60
PEM0501T						4-way, 3-pos				

NOTICE: *The power retract feature of the HW93305 and HW93306 Shop Presses is not intended to be used under load. Never pull or raise a workpiece with the power retract feature.*

ASSEMBLY

1. Adjust bed frame to lowest position and slacken winch cable.
2. Install the winch assembly to the press using 3 bolts, washers and nuts. Attach wire ropes to press bed.
3. Secure cylinder to the cylinder adapter plate, and mount the adapter plate to upper cross member using 4 bolts and washers.

NOTICE: *The cylinder comes with carrying handles, loosen Allen head socket screw to remove the handles.*

4. Attach base sections to upright channels with 4 bolts and nuts.
5. Attach lower cross member to upright channels with 4 bolts and nuts.
6. ⚠ Attach pump bracket to frame with bolts, nuts & washers provided (Model HW93302 & HW93306 does not come with a pump bracket).
7. Connect pressure gauge and hydraulic hose to gauge adapter, then connect gauge adapter to pump.
8. *For Models HW93305 and HW93306 only:* Attach second hose to Port B on Control Valve. Attach second coupler to free hose end. Connect coupler to bottom port on Cylinder.

NOTICE: Use *thread tape or compound on all connections.*

9. Place the pump on the pump bracket and connect the other end of hydraulic hose to cylinder.

CAUTION: *Before disassembly, adjust bed frame to lowest position.*

OPERATION

Before Use

1. Inspect before each use. Do not use if bent, broken or cracked components are noted. Check for and tighten any loose assemblies. Replace worn or damaged parts and assemblies with Hein-Werner authorized replacement parts only.
2. Verify that the product and the application are compatible, if in doubt contact Hein-Werner Technical Service (816) 891-6390.
3. Before using this product, read the operator's manual completely and familiarize yourself thoroughly with the product, its components and recognize the potential hazards associated with its use.

WARNING: *Projectile hazard! Ensure that workpiece is centerloaded and secure. Reduce risk of flying debris by carefully following all operating instructions. Know your press and hazards associated with its use.*

WARNING: *Risk of serious eye injury from projected or blown debris. Wear safety goggles when working with or around press.*

CAUTION: *Hose material or seals must not come in contact with corrosive materials such as battery acid, creosote-impregnated objects and wet paint. Never paint a coupler or hose. Do not subject hose to sharp objects or heavy impact.*

Refer to cylinder and pump manual for detailed operating instruction.

1. Insert the support pins to desired height, then lower the bed frame using the winch until the cable is slack and the bed frame is resting fully on the support pins.
2. Place arbor plates on the bed frame (optional).
3. Place workpiece on bed frame, using every precaution necessary to ensure your safety and prevent property damage.
4. Operating the pump:
   a) *For Models HW93300, HW93305 (manual)*: Close the release valve by turning it clockwise, and pump the handle to extend the cylinder ram. To retract, simply open the release valve of pump.
   b) *For Model HW93301 (air)*: Connect to suitable air supply, press on the foot pedal to extend the cylinder ram. To retract, simply press the release valve by stepping on the raised, stirrup shaped portion of the foot pedal.
   c) *For Models HW93302, HW93306 (electric):* Engage ON/OFF switch to start electric pump and let idle for several minutes before operating cylinder. Use control knob to extend cylinder ram.

NOTICE: *Never operate pump with hose disconnected from cylinder. Operation in this condition causes hoses to pressurize, increasing burst hazard. To protect cylinder, do not operate pump after ram is fully extended.*

NOTICE: *The power retract feature of the HW93305 and HW93306 Shop Presses is not intended to be used under load. Never pull or raise a workpiece with the power retract feature.*

5. Apply load to workpiece. **Do not overload.**
6. Stabilize workpiece to prevent it from falling from the bed once load is removed.
7. Once cylinder has fully retracted, remove workpiece.

MAINTENANCE

Refer to cylinder and pump manuals for maintenance and instructions for **adding/changing hydraulic fluid**. For best results, change fluid once per year. Use only premium hydraulic oil or equivalent for manual and air pumps, premium hydraulic oil or equivalent for electric pump is recommended.

Lubrication

A periodic coating of light lubricating oil to pivot points and hinges will help to prevent rust and assure assemblies move freely.

Storage

Depressurize the hydraulic system, disconnect the hydraulic hose and lower the bed frame to lowest position. Disconnect both hoses on the HW93305 and HW93306.

TROUBLESHOOTING

A system failure may or may not be the result of a pump malfunction. The following information is intended to be used as an aid in determining if a problem exists. Contact a Hein-Werner authorized service center for repair.

Symptom	Possible Causes	Corrective Action
Erratic cylinder action	• External leak • Internal hydraulic leak	• Follow pump instructions for bleeding air • Tighten all connections • Contact Service Center
Pump or cylinder fails to maintain pressure	• Overload condition • External leak • Internal hydraulic leak • Cylinder seals leaking • Pump or valve malfunctioning	• Remedy overload condition • Tighten all connections • Contact Service Center • Contact Service Center • Check pump operating instructions
Cylinder extends partially	• Hydraulic oil level too low in pump • Load is above the capacity of system • Cylinder is sticking or binding	• Fill and bleed the system • Match the capacity to application • Contact Service Center
Cylinder moves slower than normal	• Loose connection or coupler • Restricted hydraulic line or fitting • Pump not working correctly • Cylinder seals leaking	• Tighten connection or coupler • Clean and replace if damaged • Check pump operating instructions • Replace cylinder
Cylinder leaks hydraulic fluid	• Worn or damaged seals • Linkage binding • Loose couplers • Malfunctioning coupler	• Contact Service Center • Lubricate all moving parts • Tighten couplers • Depressurize pump and hose, remove application, install new coupler
Cylinder will not retract or retracts slower than normal	• Weak or broken retraction spring, Cylinder damaged internally • Pump reservoir too full	• Contact Service Center • Contact Service Center • Drain hydraulic fluid to correct level
Motor will not start (Model HW93302 and HW93306)	• No power/incorrect voltage • Damaged power cord • Tripped circuit breaker • Loose or faulty wiring	• Check power supply and voltage • Contact Customer Service • Ensure breaker is adequate size • Contact Customer Service
Motor cuts out (Model HW 93302 and HW93306)	• Extension cord too long • Faulty motor • Overheated motor trips breaker	• Replace with shorter cord • Replace or repair motor • Allow motor to cool, reset circuit breaker

Replacement Parts List for 25 Ton Presses

Item	Part No. for Model					Description	Qty
	HW93300	HW93305	HW93301	HW93302	HW93306		
1	N/A					Frame w/Winch and Pump Bracket	1
2	N/A					Bed Frame	1
3	300-002-003					Support Pin	2
4	300-002-004					Base	2
5	300-002-005					Lower Cross Member	1
6	300-002-006					Winch	1
7	300-002-007					Pulley	3
8	300-002-008					Cable	2
9	300-002-009		300-002-011	N/A		Pump Bracket	1
10	300-002-012					Cylinder Adapter Plate	1
11	H2506	HD2506	H2506		HD2506	Cylinder, 25 ton	1
12	CH38M					Coupler, 3/8” male	1*
13	CS3838		CS3838C			Hydraulic Hose, 3/8” ID	1*
14	GD2514					Gauge, 2.5”, 10,000 psi, dry	1
15	CF3814					Gauge Adapter	1
16	AP25					Arbor Plates	1
17	P1000	P2301M	PA1500	PE0501T	PEM0501T	Pump	1
18	300-002-016		N/A			Pump Mounting Hardware Kit	1
19	300-002-017					Hardware Kit	1
20	HW93300-M0					OIPM	1
21	HW93300-L1	HW93305-L1	HW93301-L1	HW93302-L1	HW93306-L1	Label Kit	1

* Qty 2 for HW93305 and HW93306 Double Acting Presses

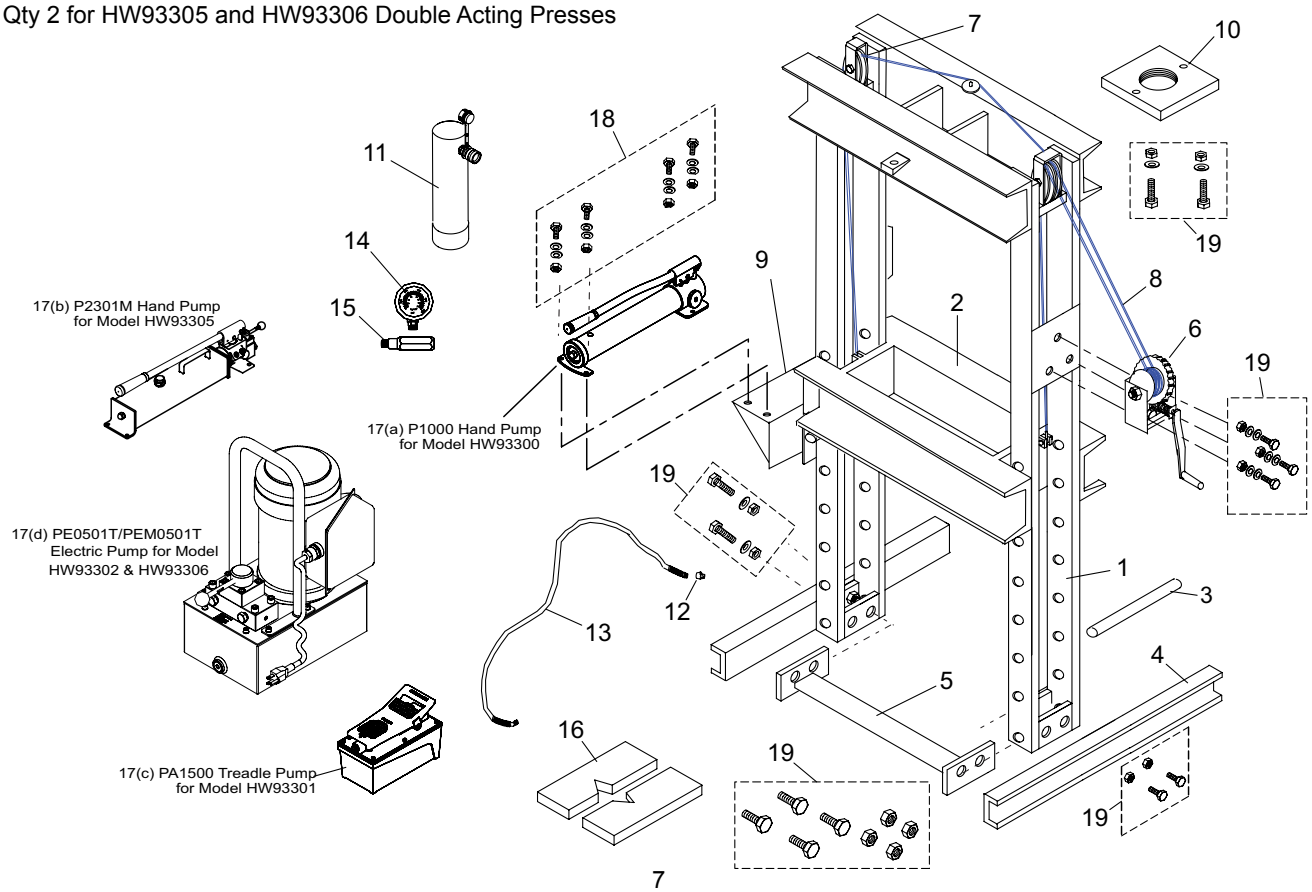

TWO YEAR LIMITED WARRANTY

For a period of two (2) years from date of purchase, SFA Companies will repair or replace, at its option, without charge, any of its products which fails due to a defect in material or workmanship under normal usage. This limited warranty is a consumer's exclusive remedy.

Performance of any obligation under this warranty may be obtained by returning the warranted product, freight prepaid, to SFA Companies Warranty Service Department, 10939 N. Pomona Ave., Kansas City, MO 64153.
Except where such limitations and exclusions are specifically prohibited by applicable law:

(1) THE CONSUMER'S SOLE AND EXCLUSIVE REMEDY SHALL BE THE REPAIR OR REPLACEMENT OF DEFECTIVE PRODUCTS AS DESCRIBED ABOVE
(2) SFA COMPANIES SHALL NOT BE LIABLE FOR ANY CONSEQUENTIAL OR INCIDENTAL DAMAGE OR LOSS WHATSOEVER.
(3) ANY IMPLIED WARRANTIES, INCLUDING WITHOUT LIMITATION THE IMPLIED WARRANTIES OF MERCHANTABILITY AND FITNESS FOR A PARTICULAR PURPOSE, SHALL BE LIMITED TO TWO YEARS, OTHERWISE THE REPAIR, REPLACEMENT OR REFUND AS PROVIDED UNDER THIS EXPRESS LIMITED WARRANTY IS THE EXCLUSIVE REMEDY OF THE CONSUMER, AND IS PROVIDED IN LIEU OF ALL OTHER WARRANTIES, EXPRESS OR IMPLIED.
(4) ANY MODIFICATION, ALTERATION, ABUSE, UNAUTHORIZED SERVICE OR ORNAMENTAL DESIGN VOIDS THIS WARRANTY AND IS NOT COVERED BY THIS WARRANTY.

Some states do not allow limitations on how long an implied warranty lasts, so the above limitation may not apply to you. Some states do not allow the exclusion or limitation of incidental or consequential damages, so the above limitation or exclusion may not apply to you. This warranty gives you specific legal rights, and you may also have other rights which vary from state to state.

SFA Companies
10939 N. Pomona Ave. Kansas City, MO 64153
816-891-6390
customerservices@heinwerner-automotive.com