Aluminum Double Acting Hollow Hole Cylinder Instruction Manual

MODELS: HUDC3006, HUDC3010 - 30 Ton Capacity
HUDC5006, HUDC5010 - 50 Ton Capacity
HUDC10006, HUDC10010 - 100 Ton Capacity
HUDC15006, HUDC15010 - 150 Ton Capacity

SFA Companies 10939 N. Pomona Ave. Kansas City, MO 64153
Tel: 888-332-6419 * Fax: 816-448-2142
E-mail: sales@bvahydraulics.com Website: www.bvahydraulics.com

Maximum Operating Pressure 10,000 PSI

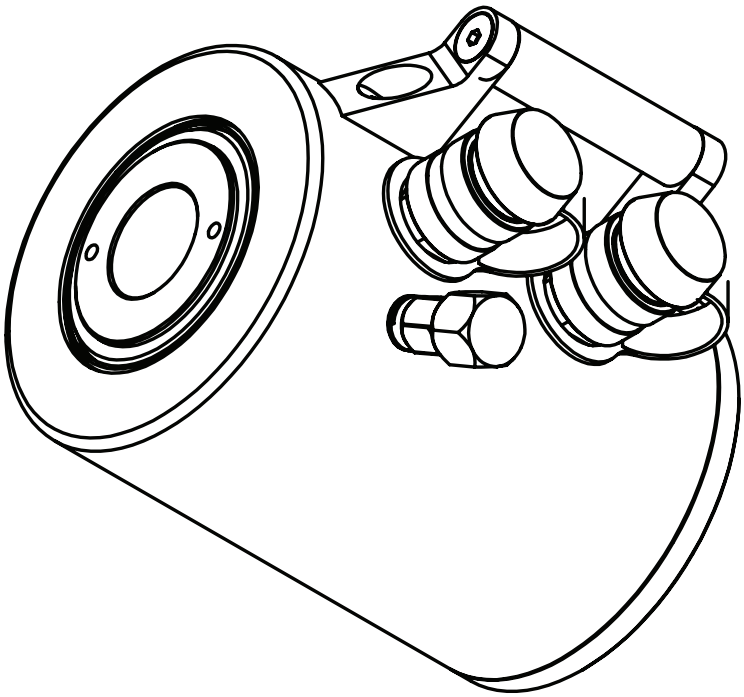

This is the safety alert symbol. It is used to alert you to potential personal injury hazards. Obey all safety messages that follow this symbol to avoid possible injury or death.

©August 2017

SAFETY AND GENERAL INFORMATION

Save these instructions. For your safety, read and understand the information contained within. The owner and operator shall have an understanding of this product and safe operating procedures before attempting to use this product. Instructions and safety information shall be conveyed in the operator's native language before use of this product is authorized. Make certain that the operator thoroughly understands the inherent dangers associated with the use and misuse of the product. If any doubt exists as to the safe and proper use of this product as outlined in this factory authorized manual, remove from service immediately.

Inspect before each use. Do not use if leaking, broken, bent, cracked or otherwise damaged parts are noted. If the cylinder has been or suspected to have been subjected to a shock load (a load dropped suddenly, unexpectedly upon it), discontinue use until checked out by a BVA Hydraulics authorized service center. Owners and operators of this equipment shall be aware that the use and subsequent repair of this equipment may require special training and knowledge. It is recommended that an annual inspection be done by qualified personnel and that any missing or damaged parts, decals, warning/safety labels or signs be replaced with BVA Hydraulics authorized replacement parts only. Any cylinder that appears to be damaged in any way, is worn or operates abnormally shall be removed from service immediately until such time as repairs can be made.

PRODUCT DESCRIPTION

BVA Hydraulics Aluminum Double Acting Hollow Hole Cylinder is designed for rated capacity pushing, spreading and pressing jobs. A wide variety of applications exist for this category of product. Special skill, knowledge and training may be required for a specific task and the product may not be suitable for all the jobs described above. Unsuitable applications would include applications that call for a device to move, level or support persons, animals, hazardous materials, mobile homes/dwellings in general, mirrors and/or plate glass, and/or to connect/secure hatches, components, etc. between bulkheads. The user ultimately must make the decision regarding suitability of the product for any given task and therefore accept responsibility for that decision. Immediately after lifting, loads must be supported by appropriate mechanical means.

WARNING: *NEVER use hydraulic cylinder as a support device.*

WARNING: *Always check connections before using. Alteration of these products is strictly prohibited. Use only those adapters and attachments provided and approved by the manufacturer.*

WARNING: *To reduce the risk of personal injury and/or property damage, ensure that the rated working pressure of each pressurized attachment be equal to or greater than the rated working pressure developed by the hydraulic pump.*

BEFORE USE

1. Before using this product, read the owner's manual completely and familiarize yourself thoroughly with the product, its components and recognize the hazards associated with its use.
2. Verify that the product and the application are compatible. If in doubt, call BVA Hydraulics Technical Service (888) 332-6419.
3. Inspect before each use. Do not use if bent, broken, leaking or damaged components are noted.
4. Replace worn or damaged parts and assemblies with BVA Hydraulics authorized replacement parts only. Lubricate as instructed in Maintenance Section.
5. Ensure method of confirming load is accurate and working properly. Have gauge or load cell accuracy verified by qualified personnel on a yearly basis.

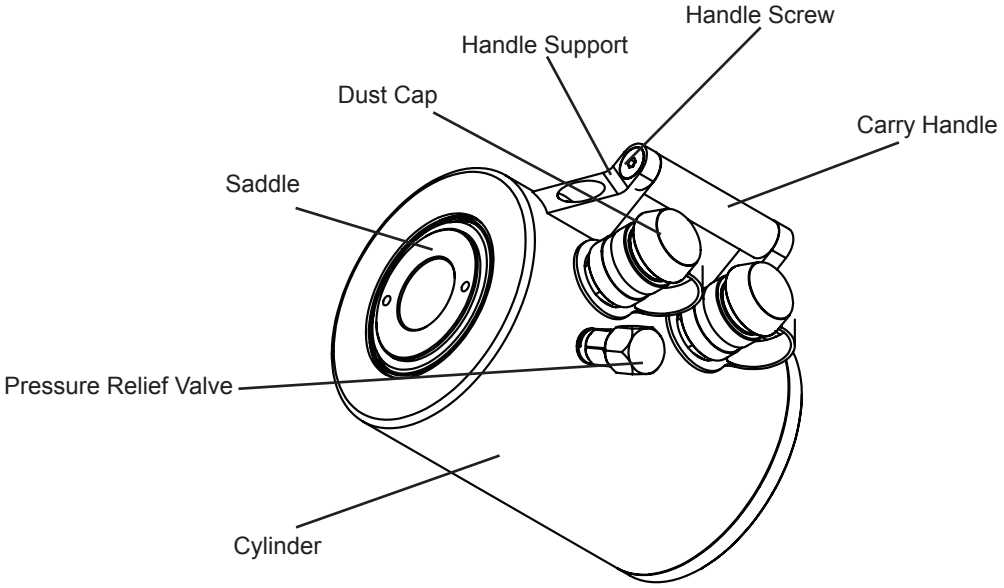

Figure 1 - Typical Cylinder Components

⚠WARNING

Failure to comply with the following warnings may result in **personal injury** as well as **property damage**.

- Study, understand, and follow all instructions provided with and on this device before use.
- The user must be a qualified operator familiar with the correct operation, maintenance, and use of cylinders.

Wear protective gear when operating hydraulic equipment.

This device is **NOT** suitable for use as **support** device! As the load is lifted, use blocking and cribbing to guard against a falling load. Stay clear of a lifted load before it is properly supported. Never rely on hydraulic pressure to support a load.

Crush Hazard. Keep hands and feet away from cylinder and workpiece during operation.

- Do not exceed rated capacity of the cylinder or any equipment in the system. The cylinder is designed for a max. pressure of 10,000 psi.
- Do not connect a cylinder to a pump with higher pressure rating.
- Do not subject cylinder to a shock loads, a load dropped suddenly, causing the system pressure to exceed rated pressure.

The system operating pressure must not exceed the pressure rating of the lowest rated component the system. Install a pressure gauge or other load measuring instrument to monitor the operating pressure. Burst hazard exists if hose, connection or any other component in the system exceed its rated pressure.

Avoid damaging hydraulic hose. Do not allow hose to kink, twist, curl, crush, cut or bend so tightly that fluid flow within the hose is blocked or reduced. Periodically inspect the hose for wear.

Do not pull, position or move cylinder setup by the hose. Use carrying handle or other means of safe transport.

Do not handle pressurized hoses. Never attempt to grasp a leaking pressurized hose. Ensure to release the system pressure before disconnecting hydraulic hose or connections.

Hydraulic fluid can ignite and burn. Keep hydraulic equipment away from flames and heat. Excessive heat will soften seals, resulting in fluid leaks. Heat also weakens hose materials.

Cylinder must be on a stable base which is able to support the load while pushing or lifting. Use shims, friction material or constrains to prevent slippage of the base or load. Ensure cylinder is fully engaged into/onto adapters, extension accessories.

Center load on cylinder. Distribute load evenly across the entire saddle surface. Do not off-center loads on a cylinder. The load can tip or the cylinder can “kick out”.

Never try to disassemble a hydraulic cylinder, refer repairs to qualified, authorized personal. Contact BVA Hydraulics tech service for authorized service center.

Do not subject hose to sharp objects or heavy impact.

Hose material or seals must not come in contact with corrosive materials such as battery acid, creosote-impregnated objects and wet paint. Never paint a coupler or hose.

- No alteration shall be made to the cylinder.
- Use only factory authorized fasteners, accessories and hydraulic fluid.

INSTALLATION

NOTICE: *Use an approved, high-grade pipe sealant to seal all hydraulic connections.*

1. Remove the dust cover and rubber plug from coupler.
2. Inspect all threads and fittings for signs of wear or damage, and replace as needed. Clean all threads and fittings.
3. Connect hydraulic hose from hydraulic pump to the cylinder coupler. Ensure that there are no fluid leaks.
4. Install in-line pressure gauge.
5. Check for leaks in system and have repaired by qualified personnel.

NOTICE: *The use of cylinder attachments or extensions reduces the cylinder capacity by at least 50% per attachment/extension.*

⚠ **WARNING:** *Before operating the pump, tighten all hose connections with proper tools. Do not overtighten. Connections should only be tightened securely and leak-free. Overtightening can cause premature thread failure or high pressure fittings to burst.*

⚠ **WARNING:** *Before repairs are made, depressurize cylinder.*

Tips for hydraulic hoses & fluid transmission lines:

- Avoid short runs of straight line tubing. Straight line runs do not provide for expansion and contraction due to pressure and/or temperature changes.
- Reduce stress in tube lines. Long tubing runs should be supported by brackets or clips.

SPECIFICATIONS

Model No.	Cylinder Capacity (tons)	Stroke (in)	Cylinder Effective Area (In²)		Internal Pressure at Capacity (psi)	Oil Capacity (in³)		Collapsed Height (in)	Extended Height (in)	Base to Inlet Port (in.)	Collar to Inlet Port (in.)	Cylinder Hole Dia. (in.)	Weight (Lbs.)
			Push	Pull		Push	Pull						
HUDC3006	30	6	6.35	2.02	10,000	38.07	12.15	11.10	17.10	2.0	2.0	1.50	30.0
HUDC3010		10				63.45	20.25	15.10	25.10				40.0
HUDC5006	50	6	10.30	3.43	10,000	61.85	20.61	11.10	17.10	2.0	2.0	2.125	50.0
HUDC5010		10				103.08	34.36	15.10	25.10				65.0
HUDC10006	100	6	21.59	7.51	10,000	129.59	45.06	14.13	20.13	2.2	2.2	3.5	120.0
HUDC10010		10				215.98	75.10	18.13	28.13				145.0
HUDC15006	150	6	30.00	11.00	10,000	183.73	65.97	14.13	20.13	2.2	2.2	3.5	158.0
HUDC15010		10				306.30	109.95	18.13	28.13				180.0

OPERATION

Operate the hydraulic pump to advance and retract the cylinder. **Do not** continue pumping when cylinder is fully extended. Internal pressure will build up and may damage the seal of the cylinder.

WARNING: NEVER rely on hydraulic pressure alone to secure a load! **NEVER** allow personnel to work or pass under a load until the load is secured by cribbing, blocking, or other mechanical means.

WARNING: *To help prevent material fatigue if the cylinder is to be used in a continuous application, the load should not exceed 85% of the rated capacity.*

WARNING: *Your cylinder, hose(s), couplings and pump all must be rated for the same maximum operating pressure, correctly connected and compatible with the hydraulic fluid used. An improperly matched system can cause the system to fail.*

WARNING: *All personnel must be clear before lowering load.*

MAINTENANCE

1. Inspect hoses and connections daily. Replace damaged components immediately with BVA Hydraulics Replacement Parts only.
2. Tighten connections as needed. Use pipe thread sealing compound when servicing connections.
3. Always use clean, approved hydraulic fluid and change as recommended or sooner if the fluid becomes contaminated (never exceed 400 hours). Follow pump manufacturers instructions for changing and adding hydraulic fluid. Use only good quality hydraulic fluid. We recommend BVA FJZ01 or equivalent when using with hand pump, air pump, or electric pump. **Never** use brake fluid, transmission fluid, turbine oil, motor oil, alcohol, glycerin etc. Use of other than good quality hydraulic oil will void warranty and damage the cylinder, pump, hose etc.
4. Use an approved, high-grade pipe thread sealant to seal all hydraulic connections. Teflon tape can be used if only one layer of tape is used and it is applied carefully (two threads back) to prevent the tape from being introduced into hydraulic system. A piece of tape could travel through the system and obstruct the flow of fluid and adversely affect function.

Lubrication & Cleaning

Keep cylinder clean at all times.

1. Any exposed threads (male or female) must be cleaned and lubricated regularly, and protected from damage. Lubricate with light machine oil.
2. If a cylinder or ram has been exposed to rain, snow, sand, airborne abrasive, or any corrosive environment, it must be cleaned, lubricated, and protected immediately after exposure. Daily clean exposed ram with clean cloth dampened with light machine oil. Protect exposed ram from the elements at all times.
3. Keep the hydraulic system as free of dirt as possible. When not in use, couplers must be sealed with dust covers. All hose connections must be free of dirt and grime. Any equipment attached to the cylinder must be kept clean.

Storage

Cylinders should be stored vertically with ram plunger fully retracted in a dry, protected area, not exposed to corrosive vapor, dust or other harmful elements. When a cylinder has not been used for a period of 4 months, it should be connected to a pump and fully extended and then retracted a minimum of 5 times. This cycle will lubricate the cylinder wall, reducing the possibility of corrosion and damage thereof.

How to remove faulty coupler:

If cylinder does not retract,

1. Secure load by other means.
2. Depressurize pump and hose.
3. Remove the cylinder from application.
4. Disconnect and replace with new coupler.

MAINTENANCE (cont.)

NOTICE: *Do not attempt to grasp with pliers or wrench without first wrapping the jaws of such tool with rags or similar padding.*

How to bleed air from system:

1. Place pump at a higher elevation than the hose and cylinder as shown in Figure 2.
2. Operate pump to fully extend and retract the cylinder 2 or 3 times. The objective is to force the air bubbles up hill and back to the pump reservoir.
3. Follow pump instruction manual to bleed the air from pump reservoir. On most pumps, air can escape by opening the oil filler plug/screw.

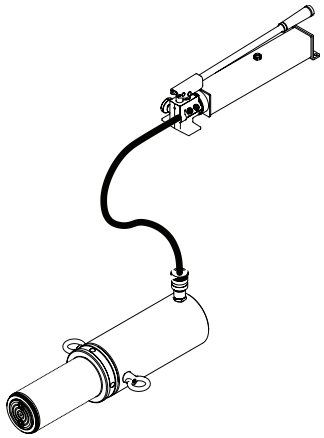

Figure 2 - Illustration to bleed air from system

TROUBLESHOOTING GUIDE

The following information is intended as an aid in determining if problem exists. Cylinders should be repaired only by authorized BVA Service Center. For repair service, contact service center in your area.

Symptom	Possible Causes	Corrective Action
Erratic action	• Air in system or pump cavitation. • External leakage in cylinder. • Cylinder sticking or binding.	• Vent the system (refer to figure 2). • Contact service center. • Contact service center.
Cylinder will not extend, or respond to pressurized fluid	• Overload condition. • Loose couplers. • Faulty couplers. • Improper valve position. • Oil level in pump is low. • Pump not operating. • Air-locked pump.	• Remedy overload condition. • Tighten couplers. • Replace both female and male couplers. • Close release valve or change valve position. • Fill and bleed the system. • Check pump's operating instructions. • Prime pump per pump operating instructions.
Cylinder extend only partially	• Oil level in pump is low. • Overload condition. • Cylinder is sticking or binding.	• Fill and bleed the system. • Remedy overload condition. • Contact service center.
Cylinder move slower than normal	• Loose connection or coupler. • Restricted hydraulic line or fitting. • Pump not working correctly. • Cylinder seals leaking.	• Tighten connection or coupler. • Clean and replace if damaged. • Check pump's operating instructions. • Contact service center.
Cylinder responds to pressurized fluid, but system does not maintain pressure	• Overload condition. • Pump or valve malfunctioning. • Cylinder seals leaking.	• Remedy overload condition. • Check pump's operating instructions. • Contact service center.
Oil leaking from cylinder	• Worn or damaged seals.	• Contact service center.
Cylinder will not retract or retracts slower than normal	• Improper valve position. • Malfunctioning coupler, damaged application. • Pump reservoir overfilled. • Cylinder damage internally.	• Open release valve or change valve position. • **Secure load by other means**. **Depressurize** pump and hoses, remove application and replace coupler. • **Secure load by other means**. **Depressurize** pump and hoses, remove application, then drain fluid to proper level. • Contact service center.
Cylinder performs poorly	• Oil level in pump is low. • Air trapped in system.	• Ensure proper oil level. • Vent the system (refer to figure 2).

Aluminum Double Acting, Hollow Hole Cylinders Service Parts

MODEL: HUDC3006, HUDC3010

SFA Companies 10939 N. Pomona Ave. Kansas City, MO 64153
Tel: 888-332-6419 * Fax: 816-448-2142
E-mail: sales@bvahydraulics.com Website: www.bvahydraulics.com

Note: Not all components of the pump are replacement items, but are illustrated as a convenient reference of location and position in the assembly sequence.

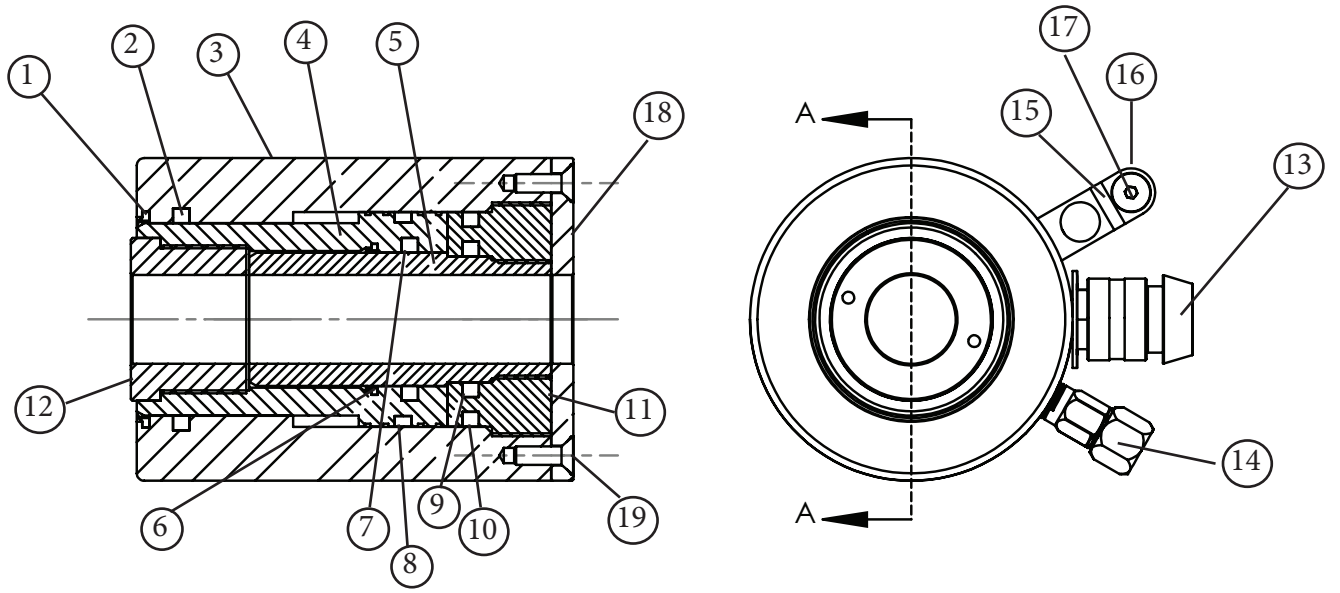

No.	Part No.	Description	Qty.
1	*	Cylinder Wiper	1
2	*	Cylinder Polypack	1
3	N/A	Cylinder Body	1
4	N/A	Piston	1
5	HUDC30-5-6	Inner Tube (HUDC3006)	1
	HUDC30-5-10	Inner Tube (HUDC3010)	1
6	*	Piston Wiper	1
7	*	Polypack (Inner Piston)	1
8	*	Piston Seal	1
9	*	Polypack (Inner Nut)	1
10	*	Polypack (Outter Nut)	1

No.	Part No.	Description	Qty.
11	HUDC30-11	Bottom Nut	1
12	HUDC30-12	Saddle	1
13	CH38F	Coupler and Dust Cap	2
14	F10-3-1610-104	Relief Valve	1
15	HUDC30-15	Handle Support	2
16	HUDC30-16-6	Handle Bar (HUDC3006)	1
	HUDC30-16-10	Handle Bar (HUDC3010)	1
17	HUDC30-17	Handle Screw	4
18	HUDC30-18	Steel Base Plate	1
19	HUDC30-19	Base Plate Screw	6
-	HUDC30-99	Repair Kit	1

(*) - indicates items included in, and available only as part of Repair Kit
N/A - part is not available as replacement

Note: To ensure safe and reliable performance, replace worn or damaged parts with BVA Hydraulics Authorized Replacement Parts only.

Aluminum Double Acting, Hollow Hole Cylinders Service Parts

MODEL: HUDC5006, HUDC5010

SFA Companies 10939 N. Pomona Ave. Kansas City, MO 64153
Tel: 888-332-6419 * Fax: 816-448-2142
E-mail: sales@bvahydraulics.com Website: www.bvahydraulics.com

Note: Not all components of the pump are replacement items, but are illustrated as a convenient reference of location and position in the assembly sequence.

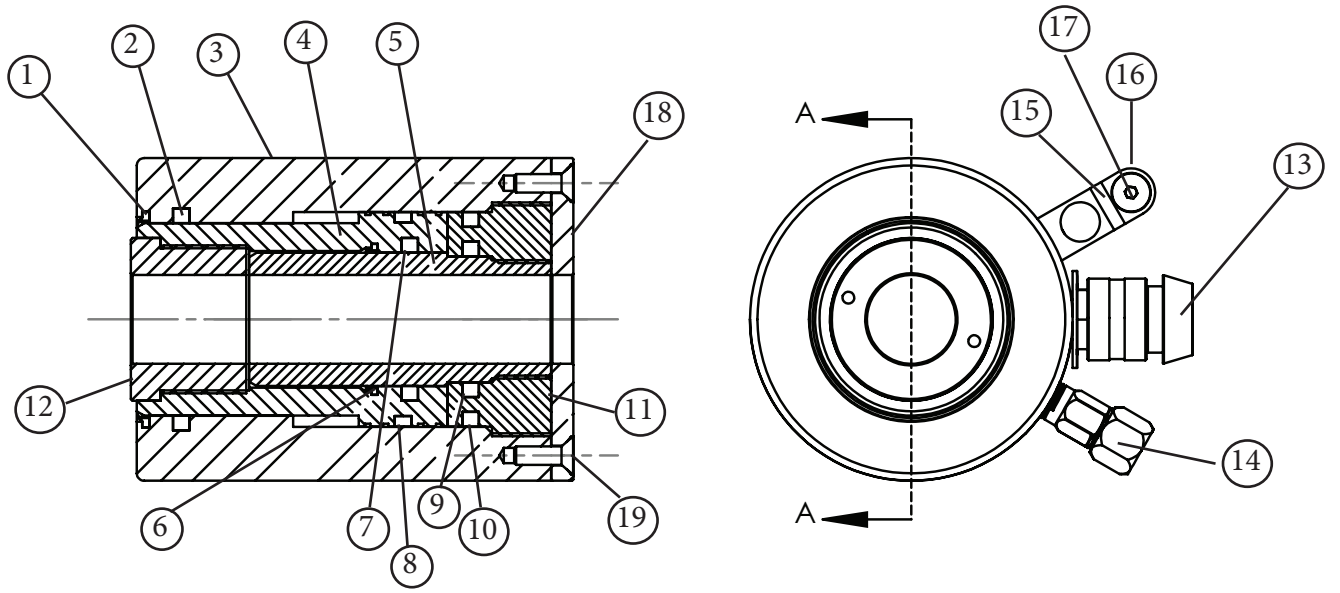

No.	Part No.	Description	Qty.
1	*	Cylinder Wiper	1
2	*	Cylinder Polypack	1
3	N/A	Cylinder Body	1
4	N/A	Piston	1
5	HUDC50-5-6	Inner Tube (HUDC5006)	1
	HUDC50-5-10	Inner Tube (HUDC5010)	1
6	*	Piston Wiper	1
7	*	Polypack (Inner Piston)	1
8	*	Piston Seal	1
9	*	Polypack (Inner Nut)	1
10	*	Polypack (Outter Nut)	1

No.	Part No.	Description	Qty.
11	HUDC50-11	Bottom Nut	1
12	HUDC50-12	Saddle	1
13	CH38F	Coupler and Dust Cap	2
14	F10-3-1610-104	Relief Valve	1
15	HUDC50-15	Handle Support	2
16	HUDC50-16-6	Handle Bar (HUDC5006)	1
	HUDC50-16-10	Handle Bar (HUDC5010)	1
17	HUDC50-17	Handle Screw	4
18	HUDC50-18	Steel Base Plate	1
19	HUDC50-19	Base Plate Screw	6
-	HUDC50-99	Repair Kit	1

(*) - indicates items included in, and available only as part of Repair Kit
N/A - part is not available as replacement

Note: To ensure safe and reliable performance, replace worn or damaged parts with BVA Hydraulics Authorized Replacement Parts only.

Aluminum Double Acting, Hollow Hole Cylinders Service Parts

MODEL: HUDC10006, HUDC10010

SFA Companies 10939 N. Pomona Ave. Kansas City, MO 64153
Tel: 888-332-6419 * Fax: 816-448-2142
E-mail: sales@bvahydraulics.com Website: www.bvahydraulics.com

Note: Not all components of the pump are replacement items, but are illustrated as a convenient reference of location and position in the assembly sequence.

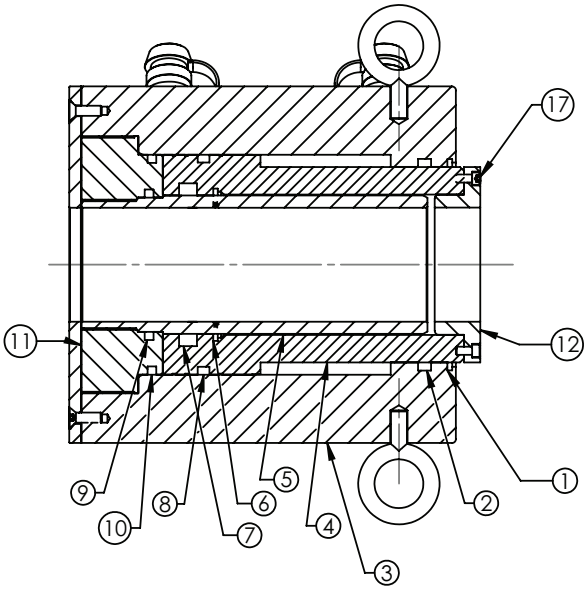

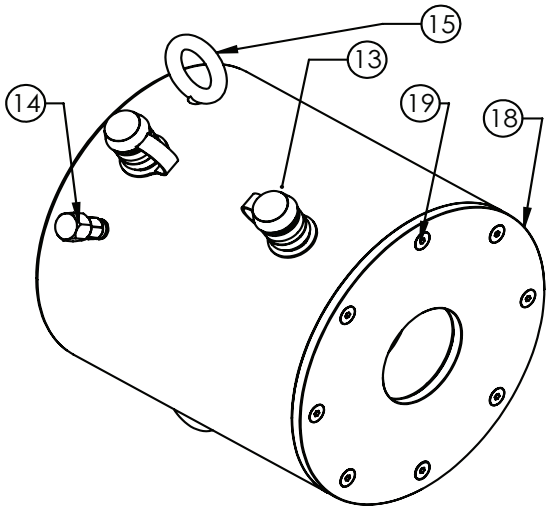

No.	Part No.	Description	Qty.
1	*	Cylinder Wiper	1
2	*	Cylinder Polypack	1
3	N/A	Cylinder Body	1
4	N/A	Piston	1
5	HUDC100-5-6	Inner Tube (HUDC10006)	1
	HUDC100-5-10	Inner Tube (HUDC10010)	1
6	*	Piston Wiper	1
7	*	Polypack (Inner Piston)	1
8	*	Piston Seal	1
9	*	Polypack (Inner Nut)	1
10	*	Polypack (Outter Nut)	1

No.	Part No.	Description	Qty.
11	HUDC100-11	Bottom Nut	1
12	HUDC100-12	Saddle	1
13	CH38F	Coupler and Dust Cap	2
14	F10-3-1610-104	Relief Valve	1
15	HUDC100-15	Eyebolt - 1/2"	2
16	N/A	N/A	1
17	HUDC100-17	Handle Screw	4
18	HUDC100-18	Steel Base Plate	1
19	HUDC100-19	Base Plate Screw	6
-	HUDC100-99	Repair Kit	1

(*) - indicates items included in, and available only as part of Repair Kit
N/A - part is not available as replacement

Note: To ensure safe and reliable performance, replace worn or damaged parts with BVA Hydraulics Authorized Replacement Parts only.

Aluminum Double Acting, Hollow Hole Cylinders Service Parts

MODEL: HUDC15006, HUDC15010

SFA Companies 10939 N. Pomona Ave. Kansas City, MO 64153
Tel: 888-332-6419 * Fax: 816-448-2142
E-mail: sales@bvahydraulics.com Website: www.bvahydraulics.com

Note: Not all components of the pump are replacement items, but are illustrated as a convenient reference of location and position in the assembly sequence.

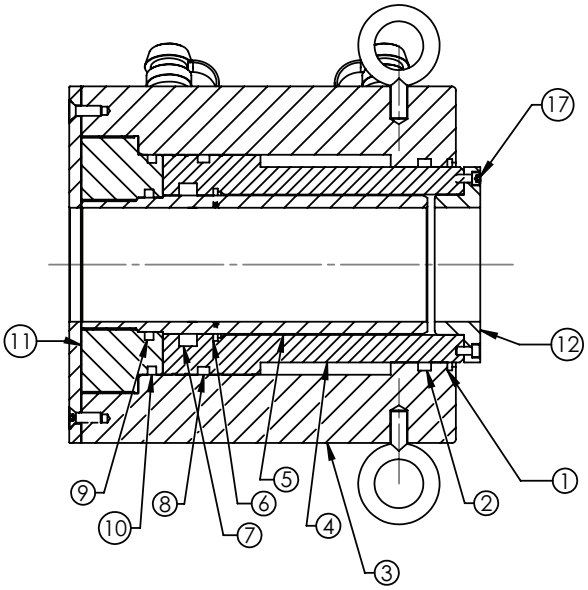

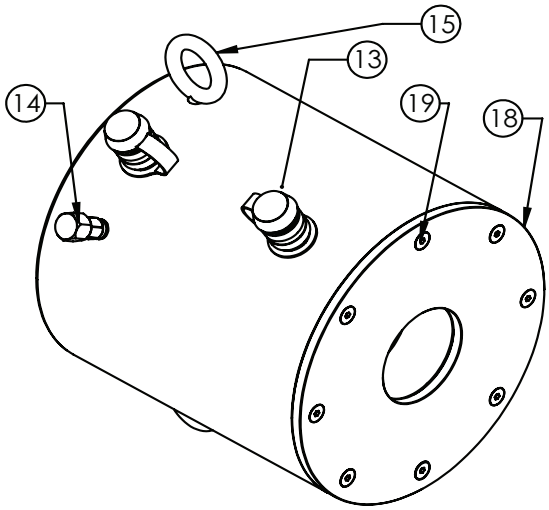

No.	Part No.	Description	Qty.
1	*	Cylinder Wiper	1
2	*	Cylinder Polypack	1
3	N/A	Cylinder Body	1
4	N/A	Piston	1
5	HUDC150-5-6	Inner Tube (HUDC15006)	1
	HUDC150-5-10	Inner Tube (HUDC15010)	1
6	*	Piston Wiper	1
7	*	Polypack (Inner Piston)	1
8	*	Piston Seal	1
9	*	Polypack (Inner Nut)	1
10	*	Polypack (Outter Nut)	1

No.	Part No.	Description	Qty.
11	HUDC150-11	Bottom Nut	1
12	HUDC150-12	Saddle	1
13	CH38F	Coupler and Dust Cap	2
14	F10-3-1610-104	Relief Valve	1
15	HUDC150-15	Eyebolt - 1/2"	2
16	N/A	N/A	1
17	HUDC150-17	Handle Screw	4
18	HUDC150-18	Steel Base Plate	1
19	HUDC150-19	Base Plate Screw	6
-	HUDC150-99	Repair Kit	1

(*) - indicates items included in, and available only as part of Repair Kit
N/A - part is not available as replacement

Note: To ensure safe and reliable performance, replace worn or damaged parts with BVA Hydraulics Authorized Replacement Parts only.

LIMITED LIFETIME WARRANTY

BVA Hydraulics®, represented in the United States by SFA Companies [“SFA”] warrants this product to be free from defects in material and workmanship for the life of the product as long as the original purchaser owns the product. The warranty is non-transferable and is subject to the terms, exclusions, and limitations described below:

- Damaged components, including but not limited to bent rams, dented or crushed cylinder walls, broken welds or couplers as well as worn out seals, o-rings and springs are the result of misuse and not covered by warranty and BVA Hydraulics will not provide any warranty credit for such damaged components.
- This warranty does not cover ordinary wear and tear, overloading, alterations (including repairs or attempted repairs not performed by BVA Hydraulics or one of its authorized personnel), improper fluid use, or use of the product in any manner for which the product was not intended or the use of which is not in accordance with the instructions or warnings provided with the product.
- In the unlikely event that a BVA Hydraulics product fails due to material defect in workmanship, you may contact SFA for disposition. In such cases, the customer’s sole and exclusive remedy for any breach or alleged breach of warranty is limited to the repair or replacement of the defective product.
- Under no circumstances is BVA Hydraulics liable for any consequential or incidental damage or loss whatsoever.
- THIS WARRANTY IS LIMITED TO NEW PRODUCTS SOLD THROUGH AUTHORIZED DISTRIBUTORS AND OTHER CHANNELS DESIGNATED BY BVA HYDRAULICS. NO AGENT, EMPLOYEE OR OTHER REPRESENTATIVE OF BVA HYDRAULICS IS AUTHORIZED TO MODIFY THIS WARRANTY.
- THE FOREGOING IS EXCLUSIVE AND IS IN LIEU OF ALL OTHER EXPRESS AND IMPLIED WARRANTIES, INCLUDING BUT NOT LIMITED TO THE IMPLIED WARRANTIES OF MERCHANTABILITY AND FOR A FITNESS FOR A PARTICULAR PURPOSE.
- Components not manufactured by BVA Hydraulics including certain motor systems, gasoline engines, and other are not covered by this warranty and instead are covered by the manufacturer’s separate manufacturer’s warranty provided in the package.
- BVA Hydraulics’ liability in all cases is limited to, and will not exceed the purchase price paid for the product.

SFA Companies
10939 N. Pomona Ave. Kansas City, MO 64153
Tel: 888-332-6419
E-mail: sales@bvahydraulics.com

SFA Companies
10939 N. Pomona Ave. Kansas City, MO 64153
Tel: 888-332-6419
E-mail: sales@bvahydraulics.com

SFA Companies
10939 N. Pomona Ave. Kansas City, MO 64153
Tel: 888-332-6419
E-mail: sales@bvahydraulics.com